First things first...

- Make sure that the power is switched **OFF** before beginning the installation
- Installation must be carried out by a qualified electrician
- This product must only be used at 24V
- Profile can be cut with a saw

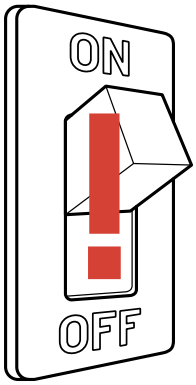

Components - what's included with the kit?

Everything you need to assemble and install DLD LumaLine is included:

1 x Profile | 2m length | black or white

1 x Diffuser | frosted

2 x End caps | matching finish

2 x Suspension cable kit | 5m

2 x Ceiling fixing set | matching finish

1 x LED tape | Lightflow CSP 10W | 5m reel | 2700K or 3000K

1 x Driver | Phase dim or DALI

What tools do I need?

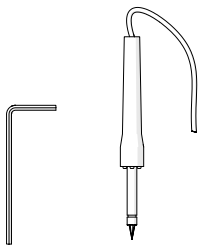

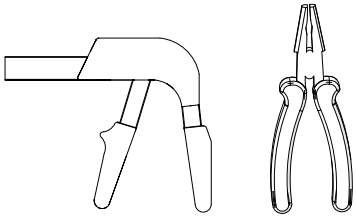

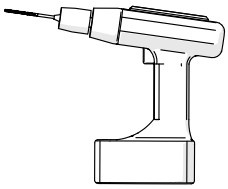

Not included:

1. Allen hex key M6
2. Soldering iron

3. Drywall anchor M6 install gun (optional)
4. Pliers

5. Drill
- Drill bit 3mm
- Drill bit 7-10mm
- Drill bit 10mm

Ceiling fixing set

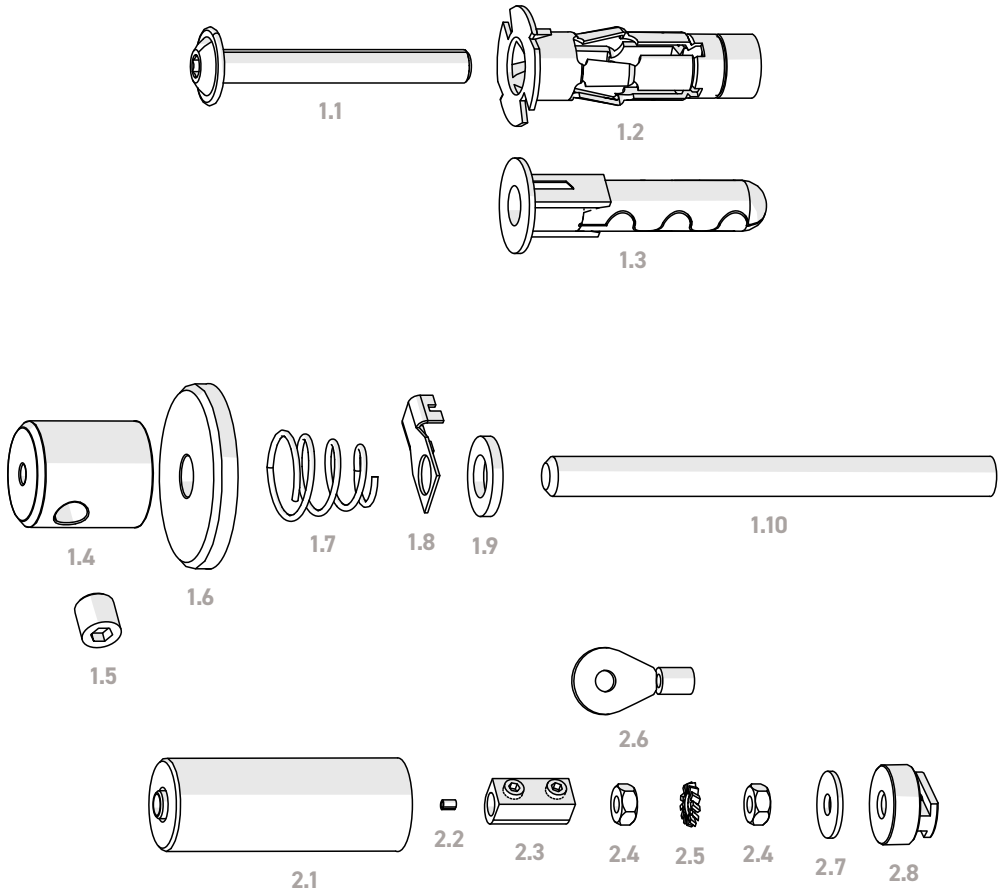

1.1	Screw M6x45
1.2	Drywall anchor M6x37
1.3	Nail anchor M6x60
1.4	Connector conductive
1.5	Pressure screw M6x6
1.6	Fastener masking cover
1.7	Conical spring
1.8	Power connector dia. 6
1.9	Pad M6
1.10	Pressure screw M6x70
2.1	Connector head
2.2	Sleeve for the cable clamp
2.3	Conductive terminal block with screws
2.4	Nut M3
2.5	Locking washer M3
2.6	Power connector dia. 3
2.7	Pad 3,2
2.8	Profile hook

SELV 10W 24V IP20 TRIMMABLE DIMMABLE DALI DIMMABLE

1. Installation | Ceiling Fixing Option 1

1-1

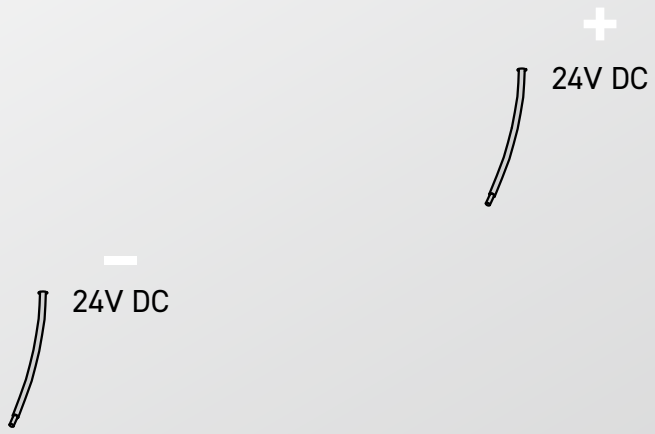

1-2

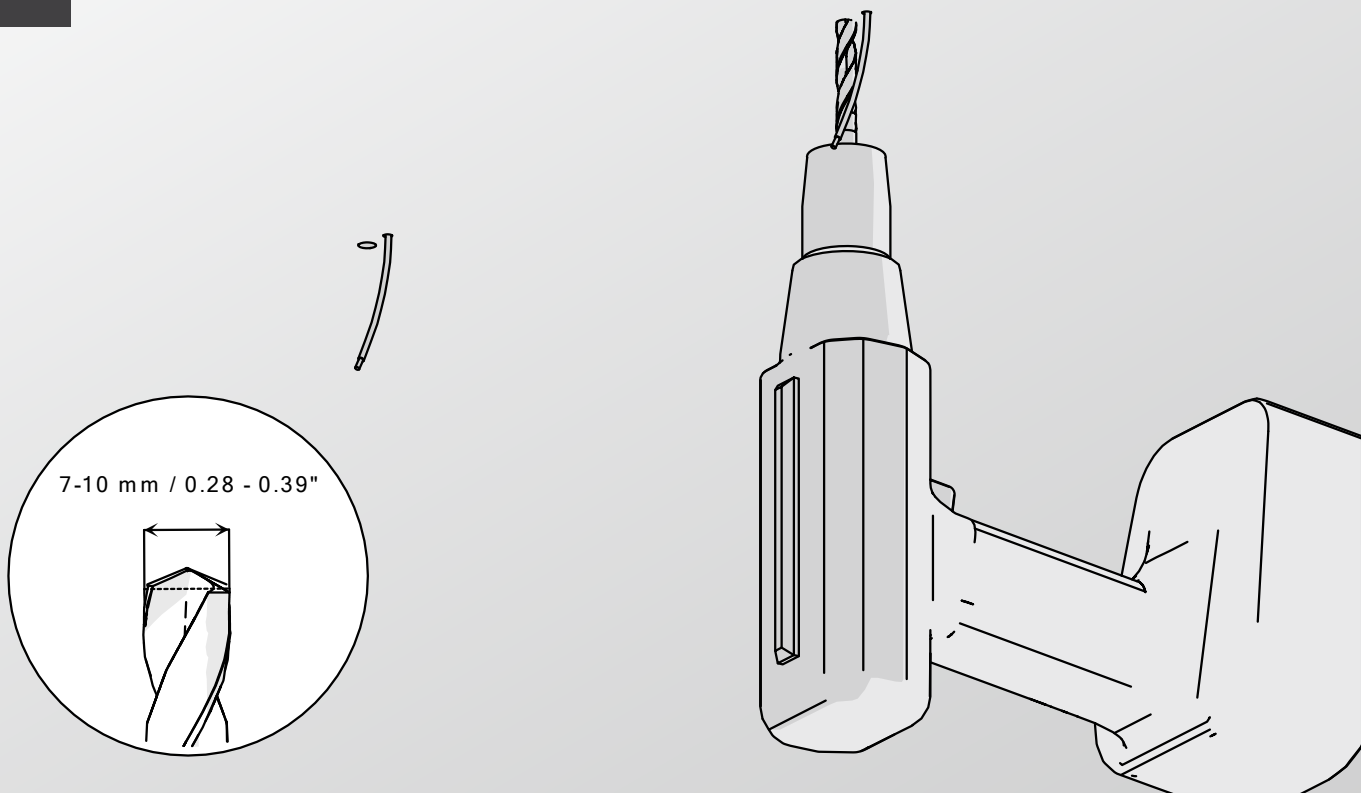

1-3

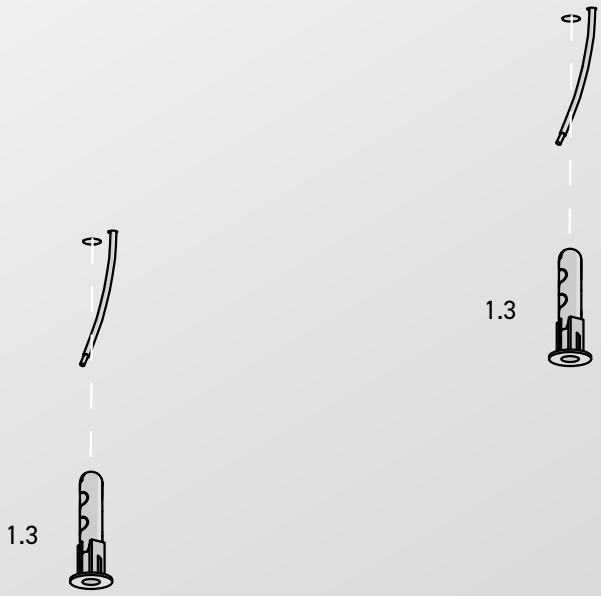

1-4

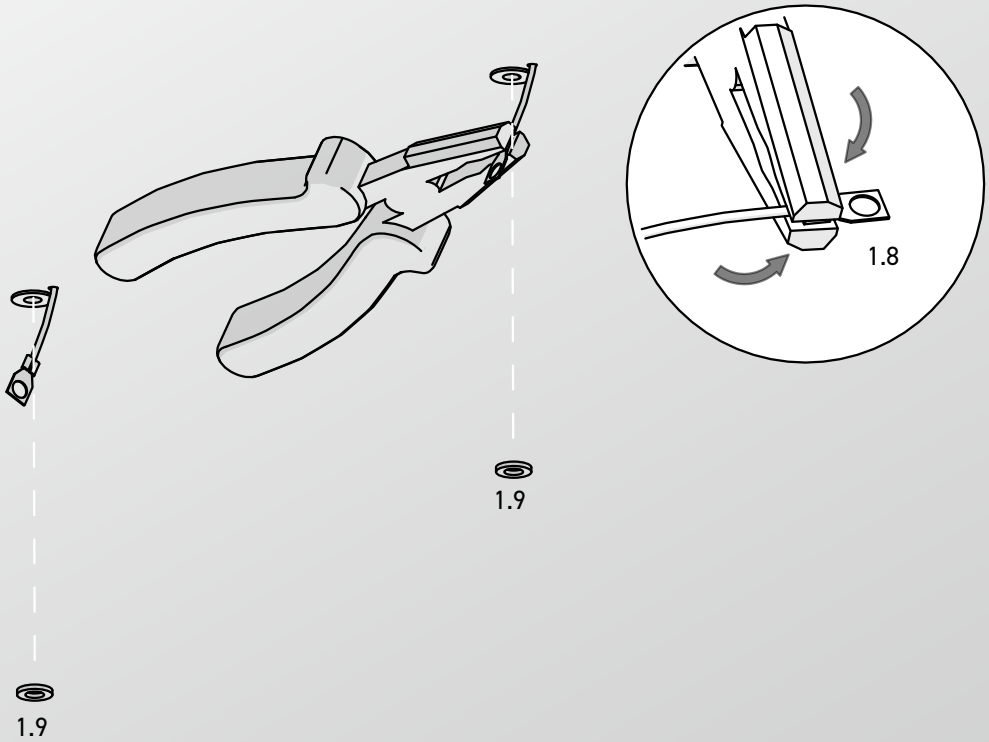

1-5

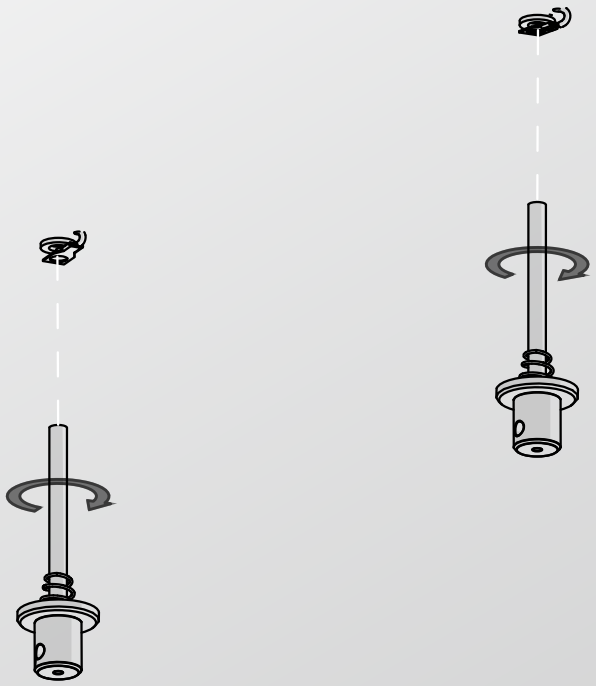

1-6

2. Installation | Ceiling Fixing Option 2

2-1

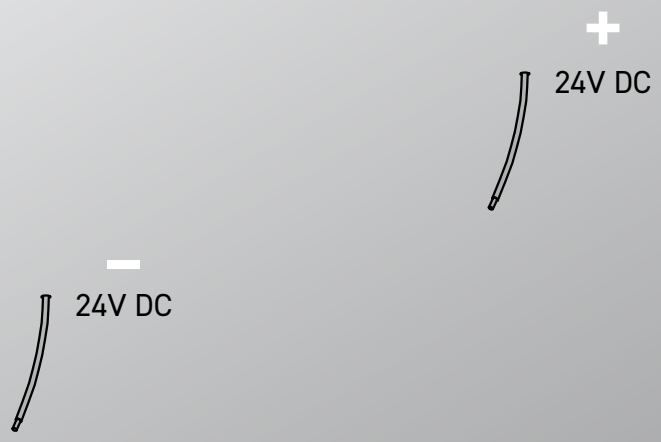

2-2

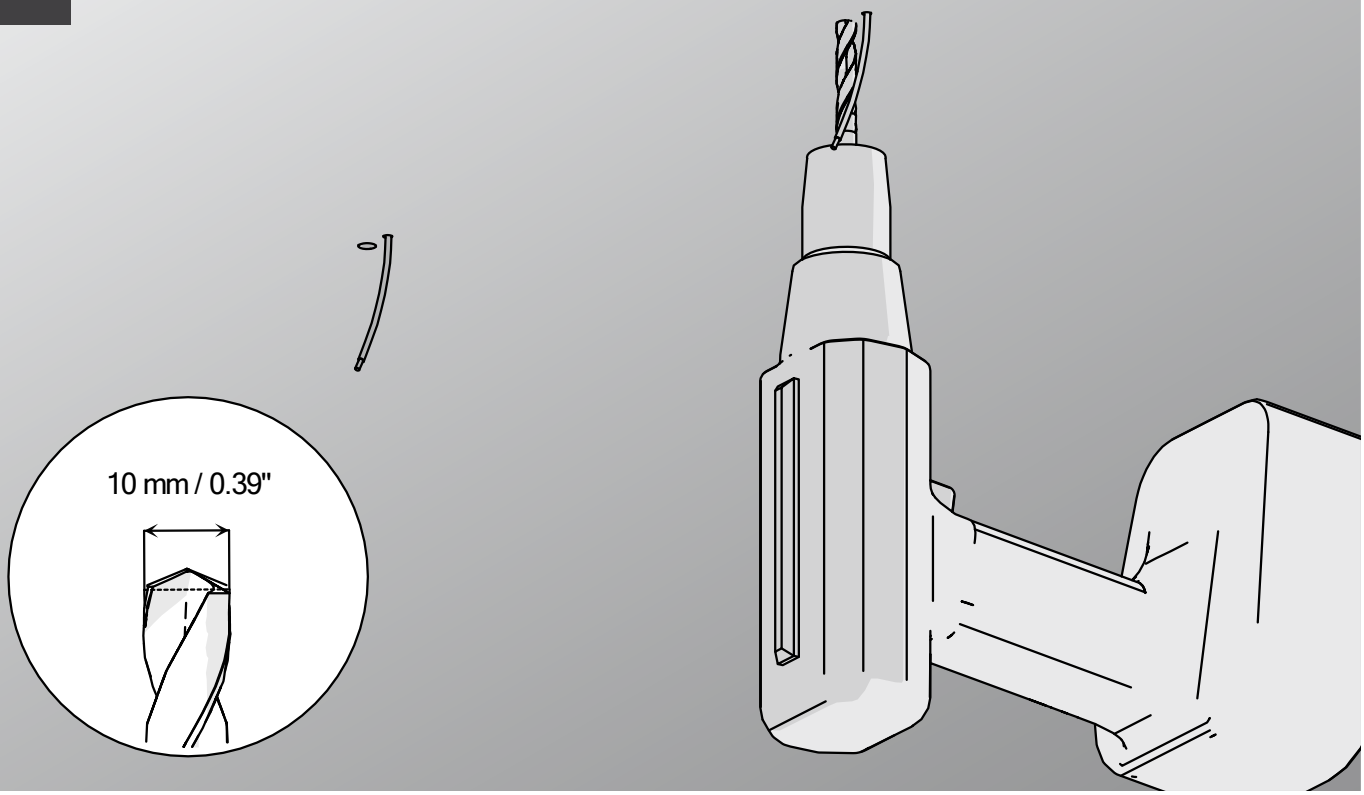

2-3

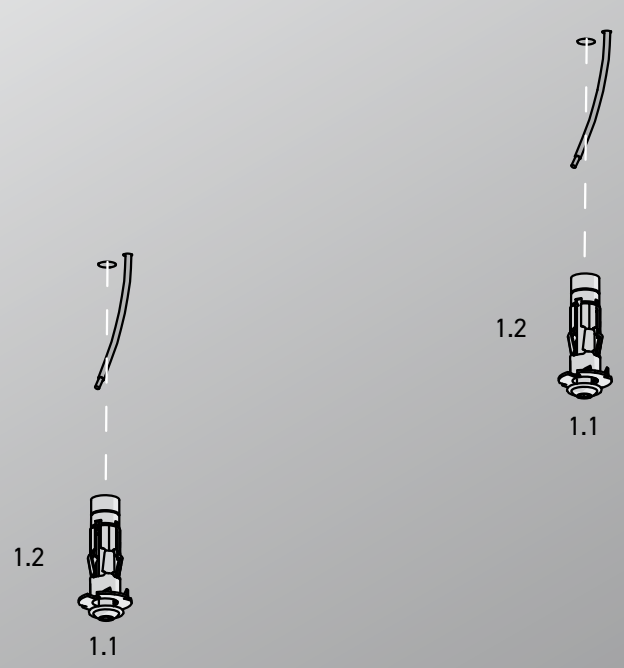

2-4

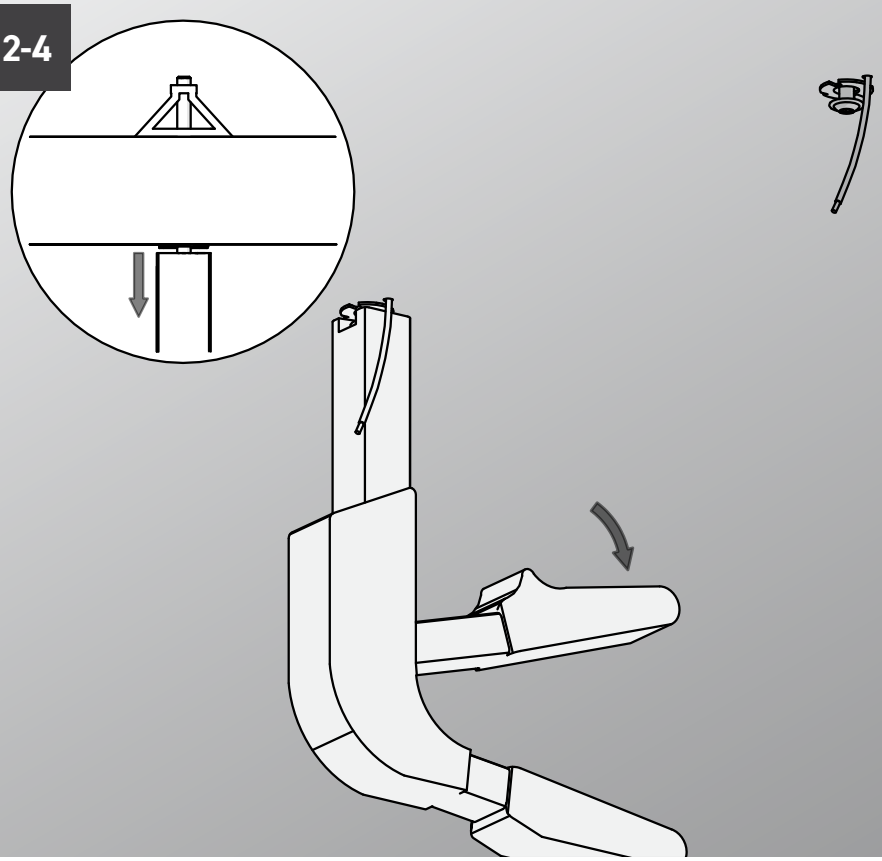

DLD ARCHITECTURAL

2-5

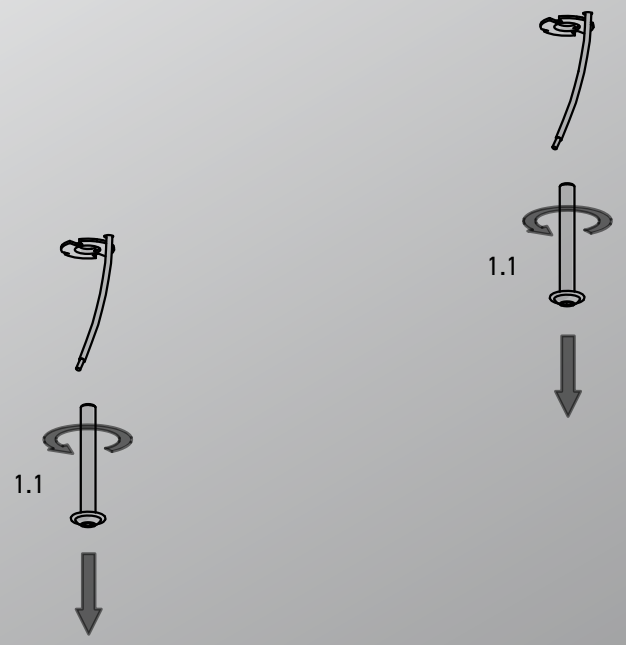

2-6

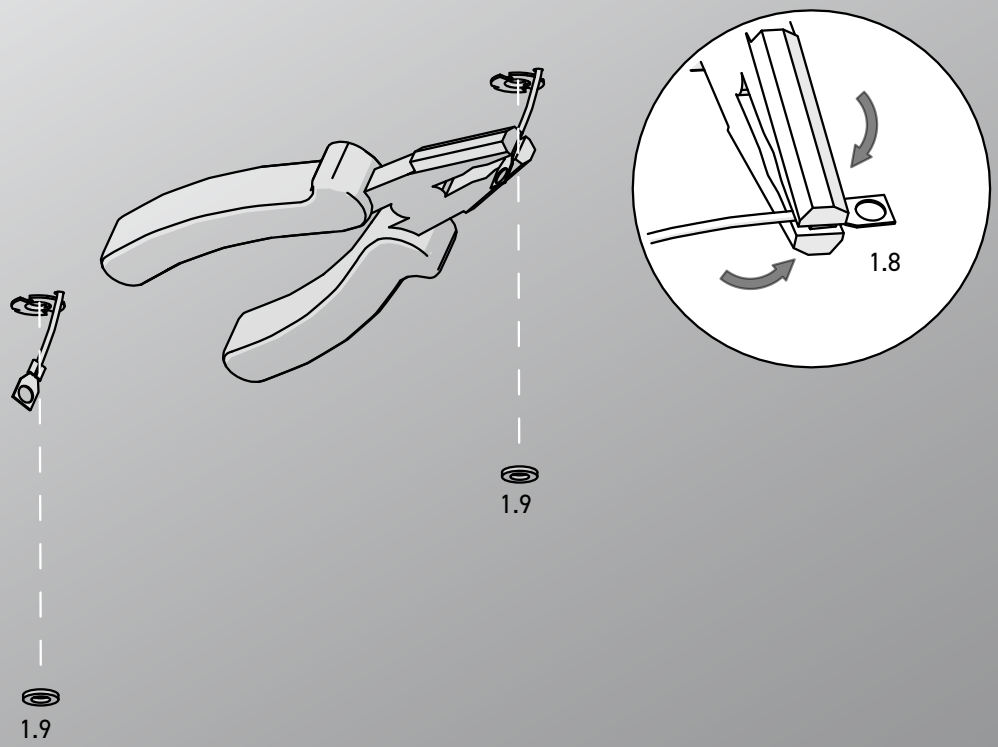

2-7

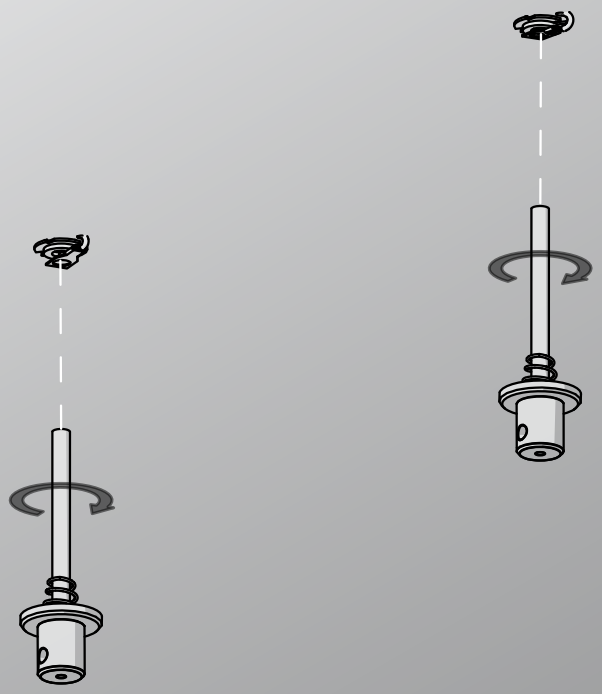

2-8

3. Assembly & Installation | Pendant Assembly

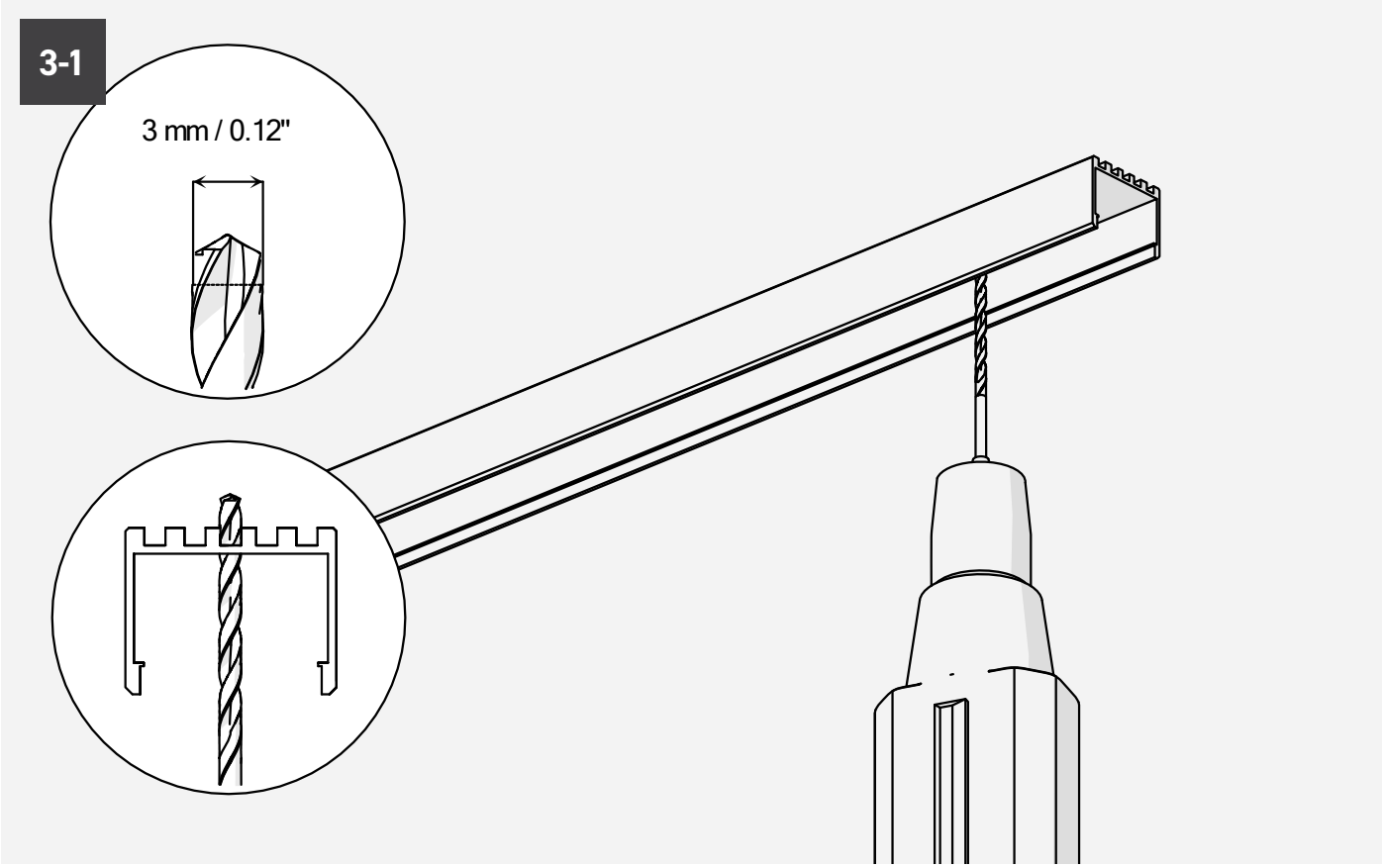

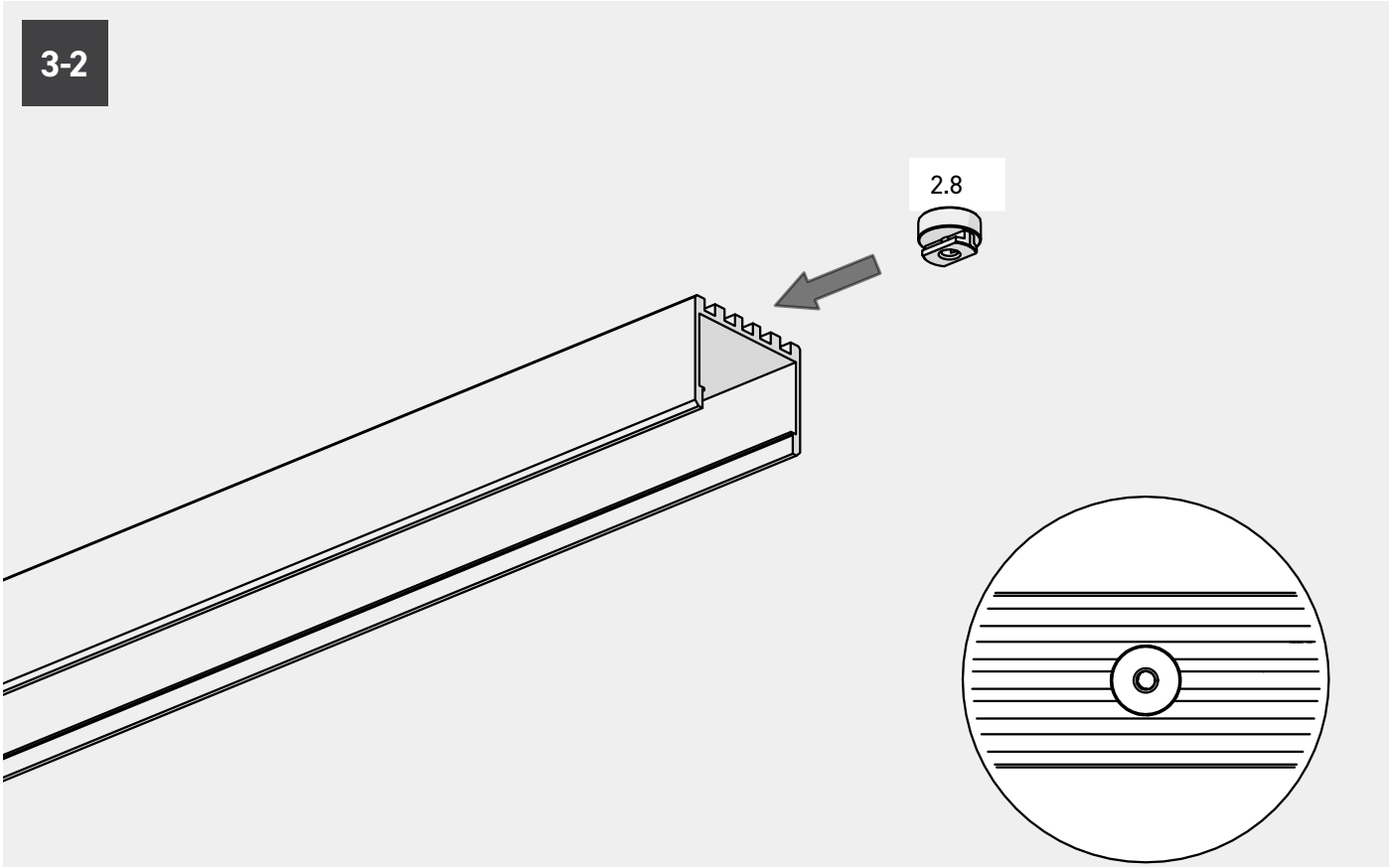

3-3

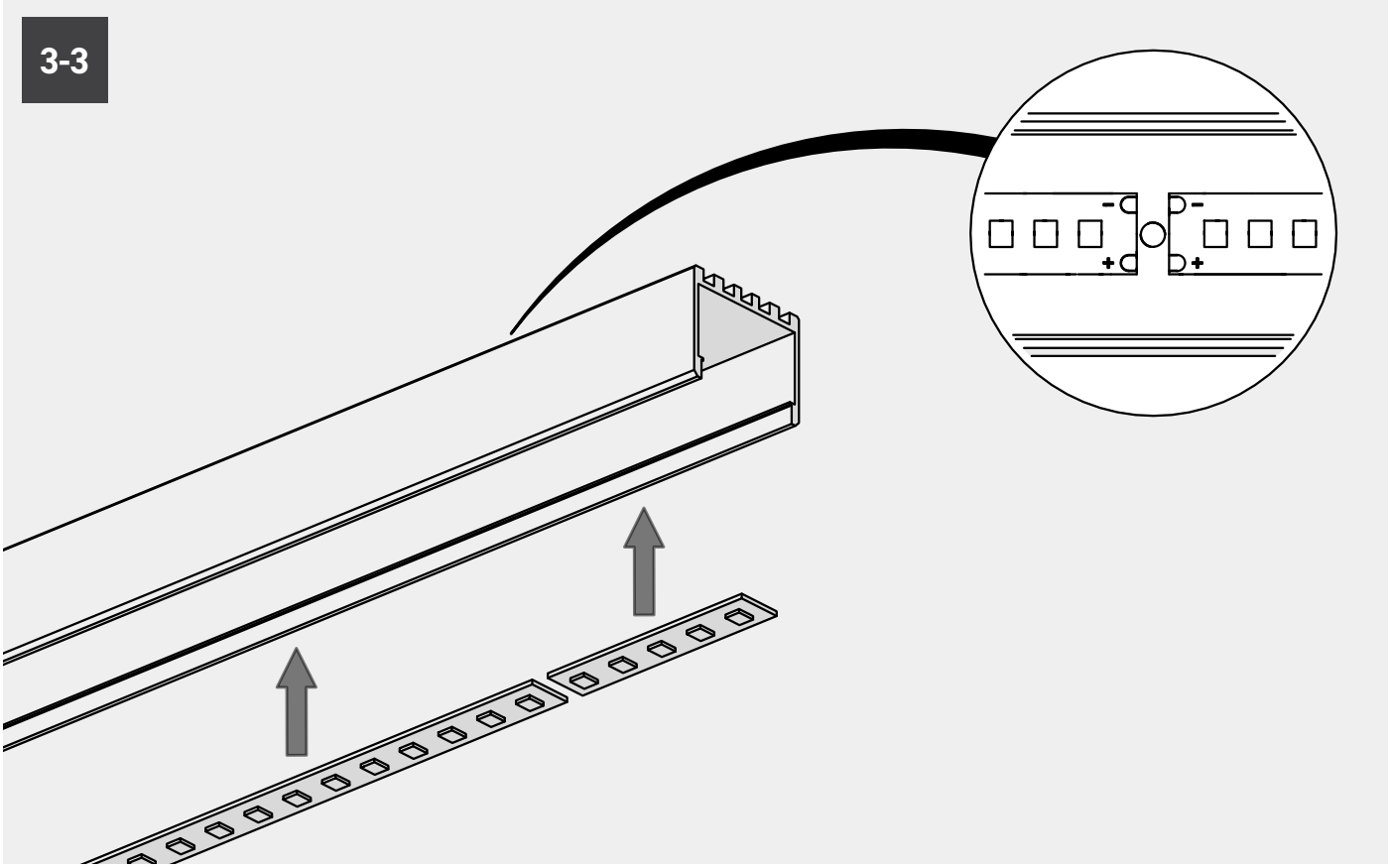

3-4

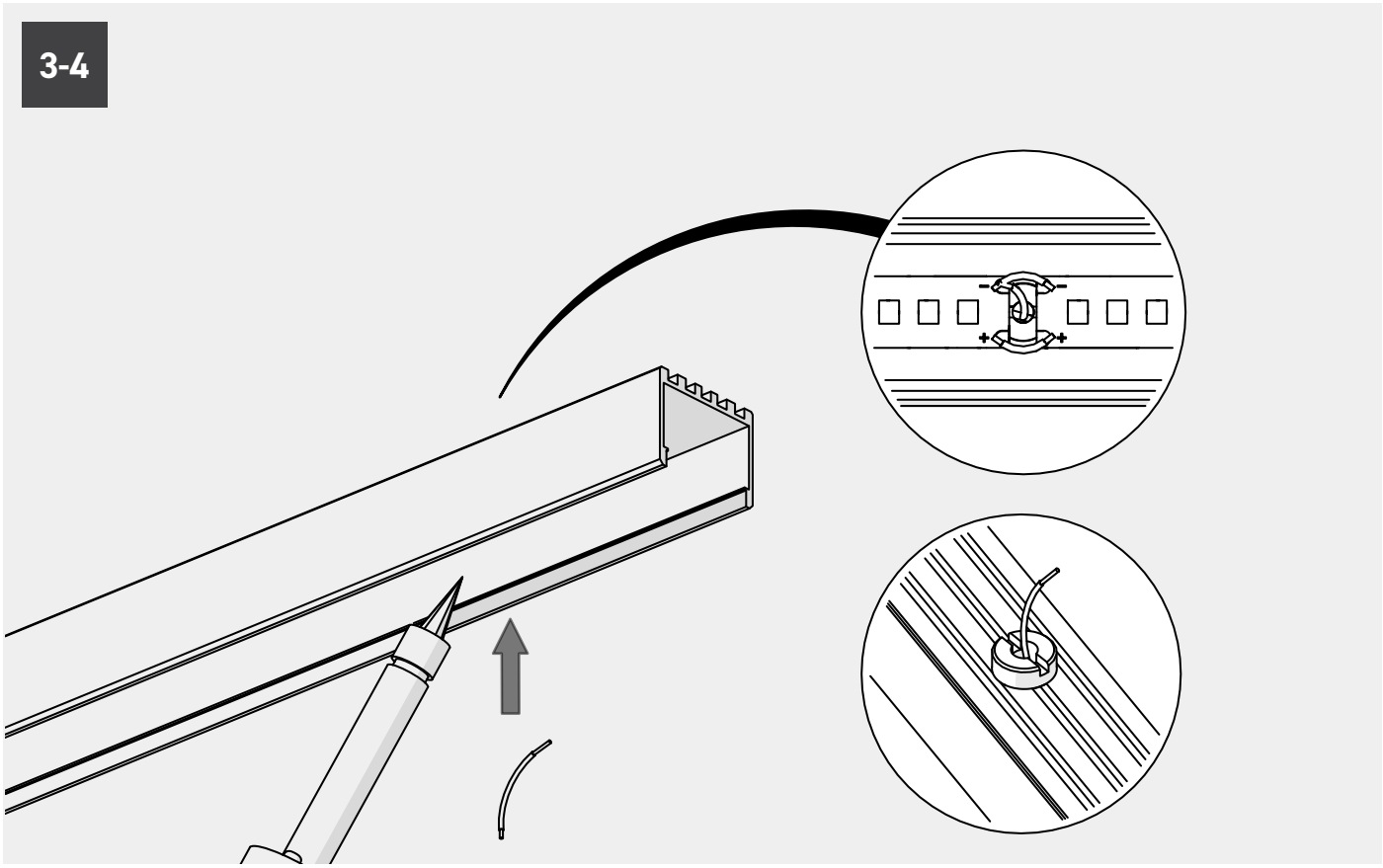

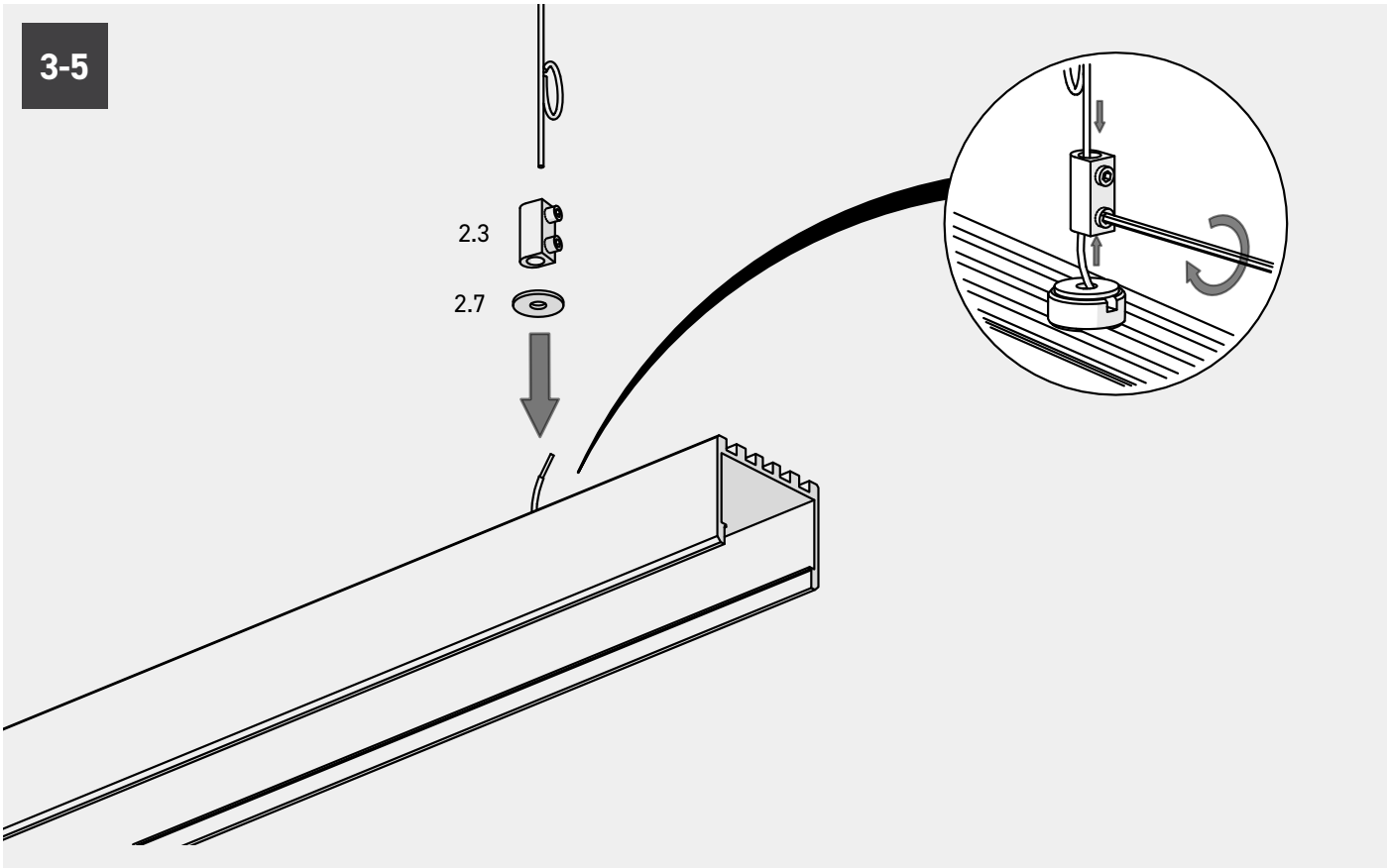
3-5
2.3
2.7

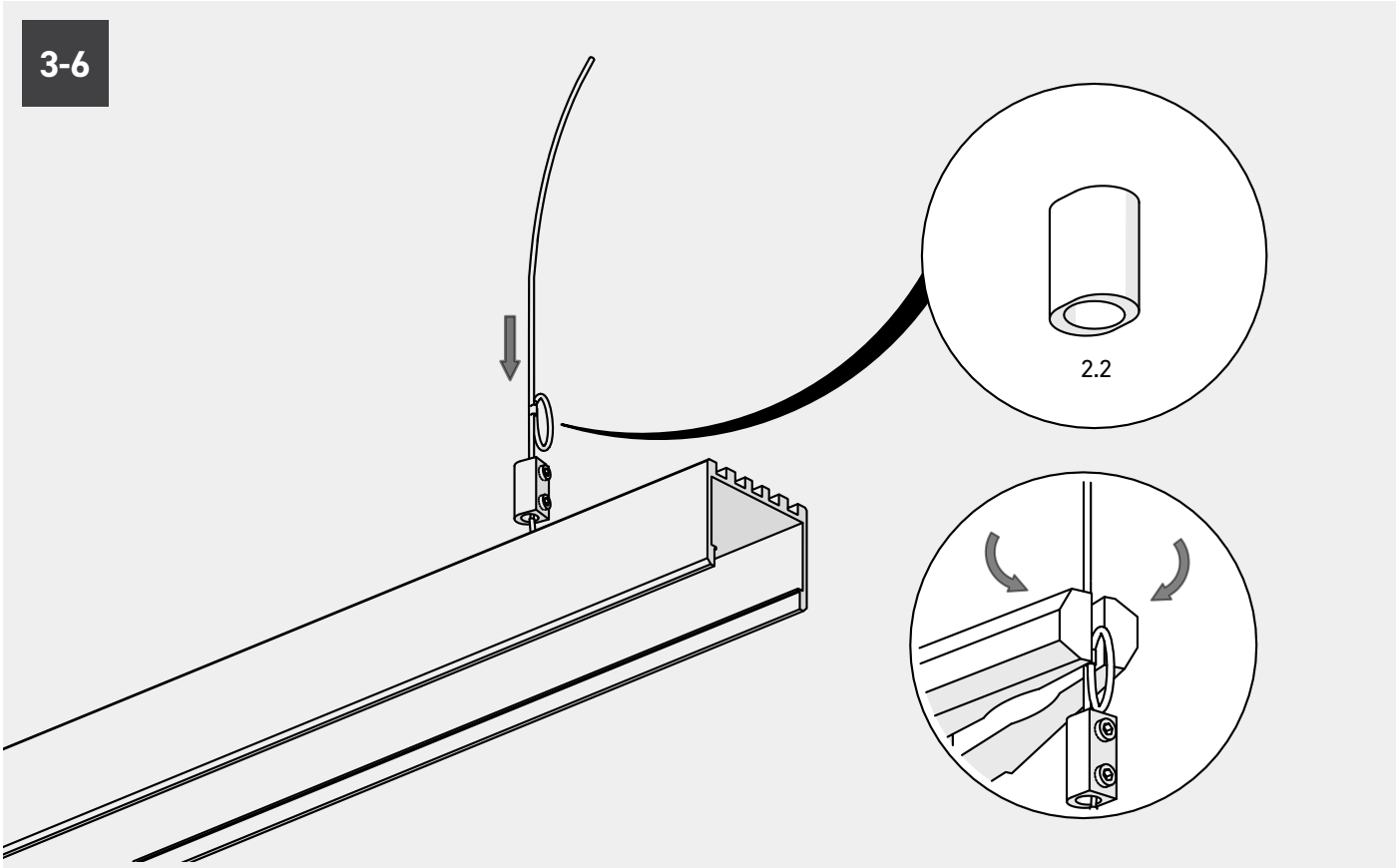
3-6
2.2

3-7

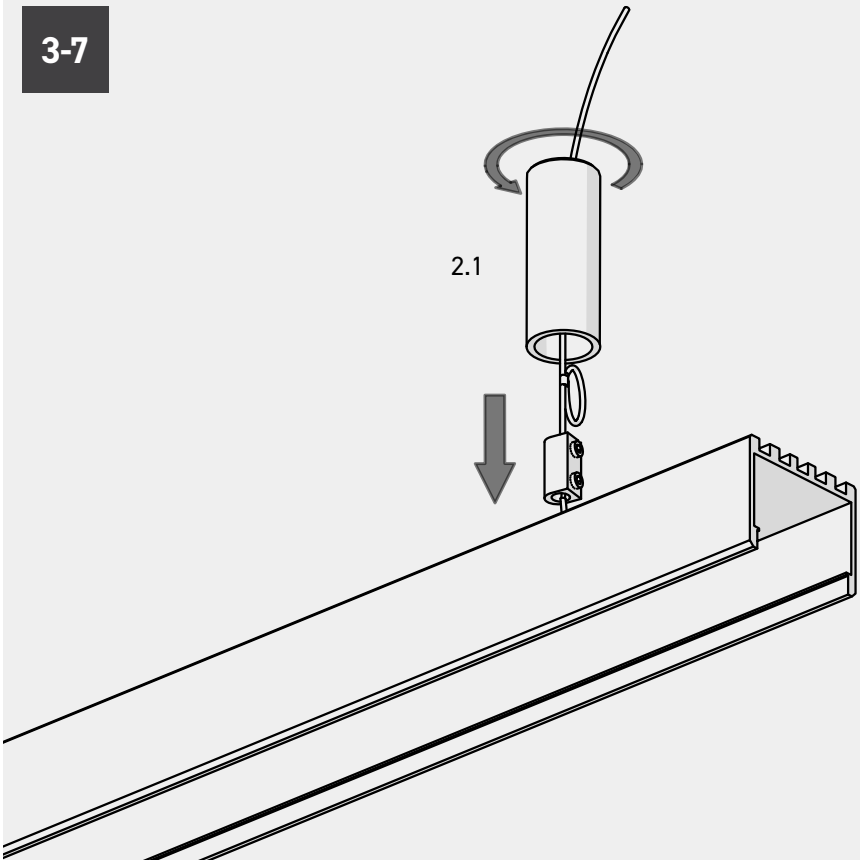

3-8

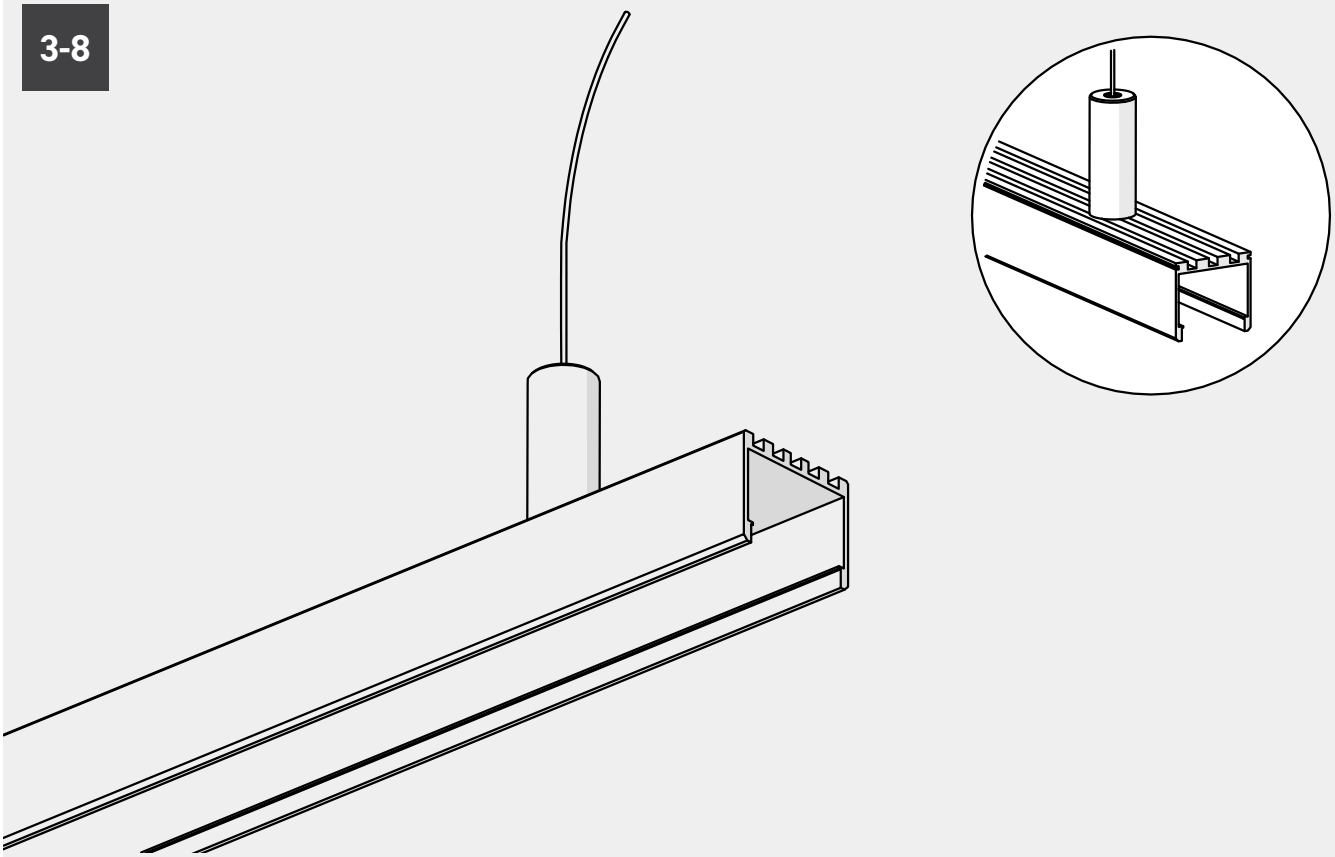

3-9

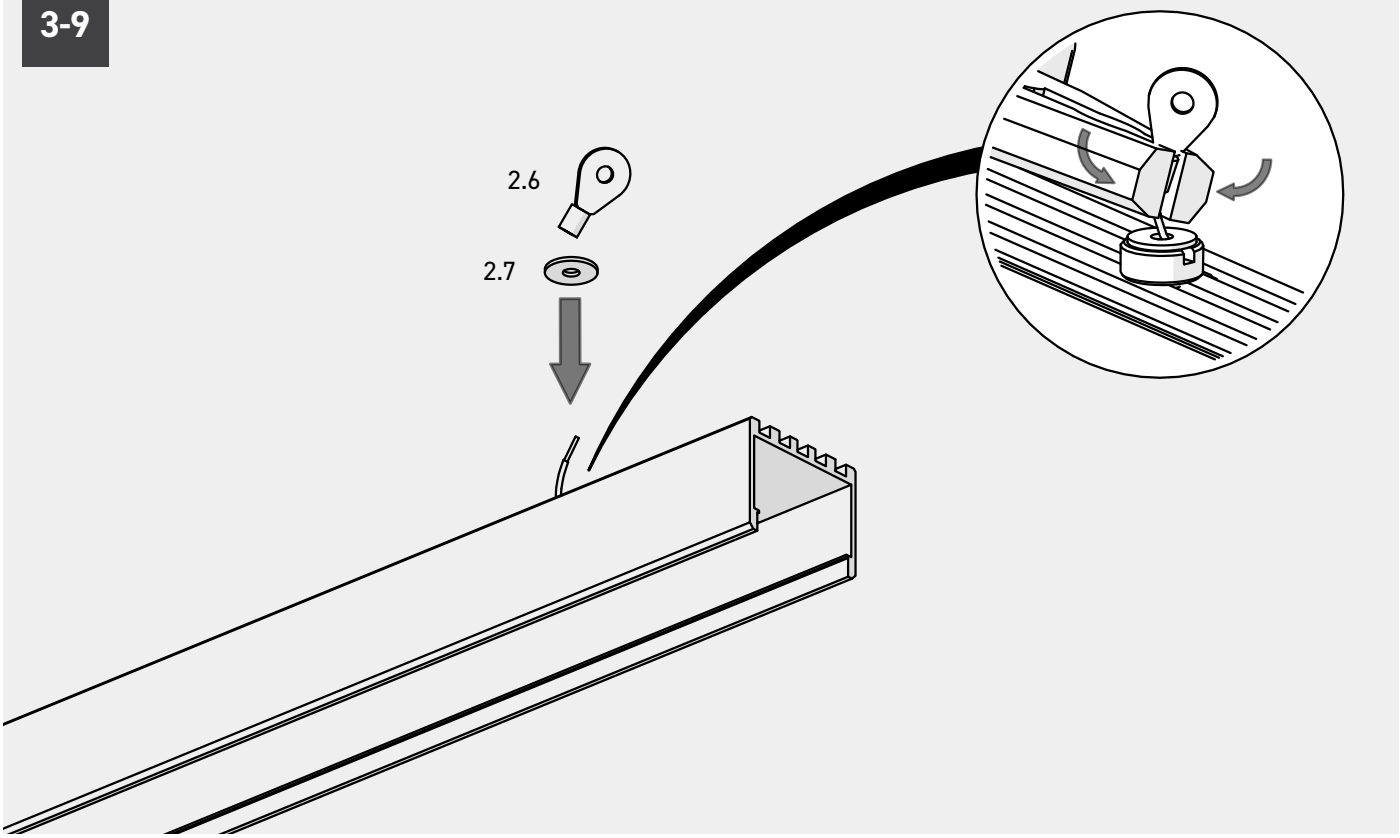

3-10

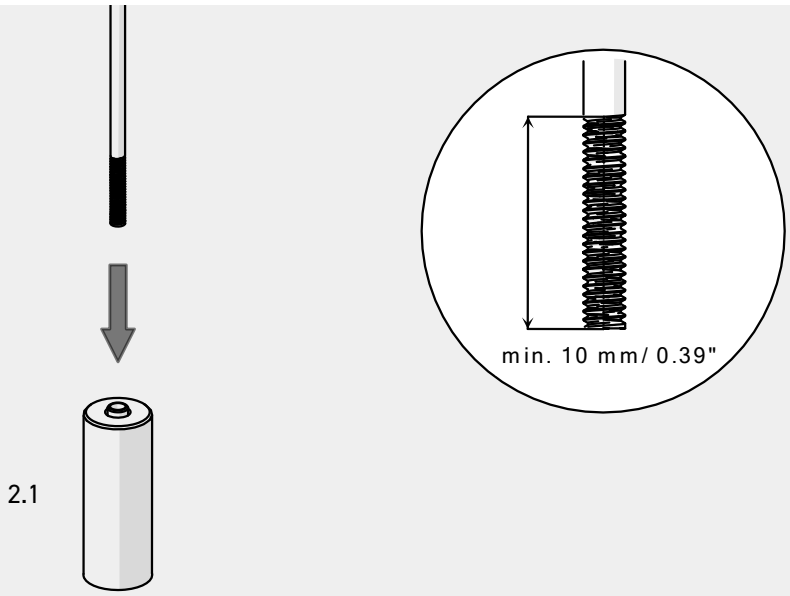

3-11

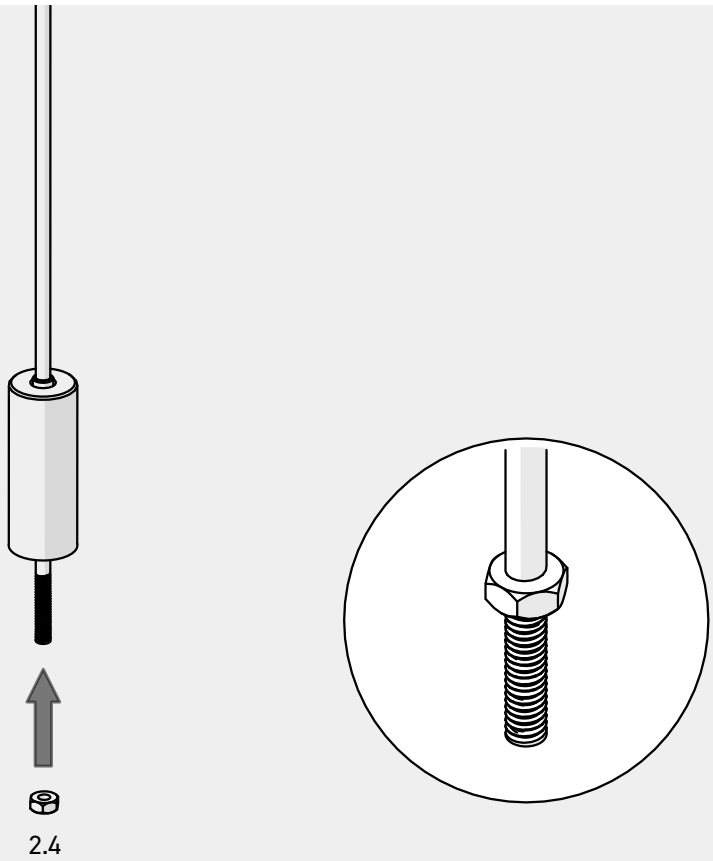

3-12

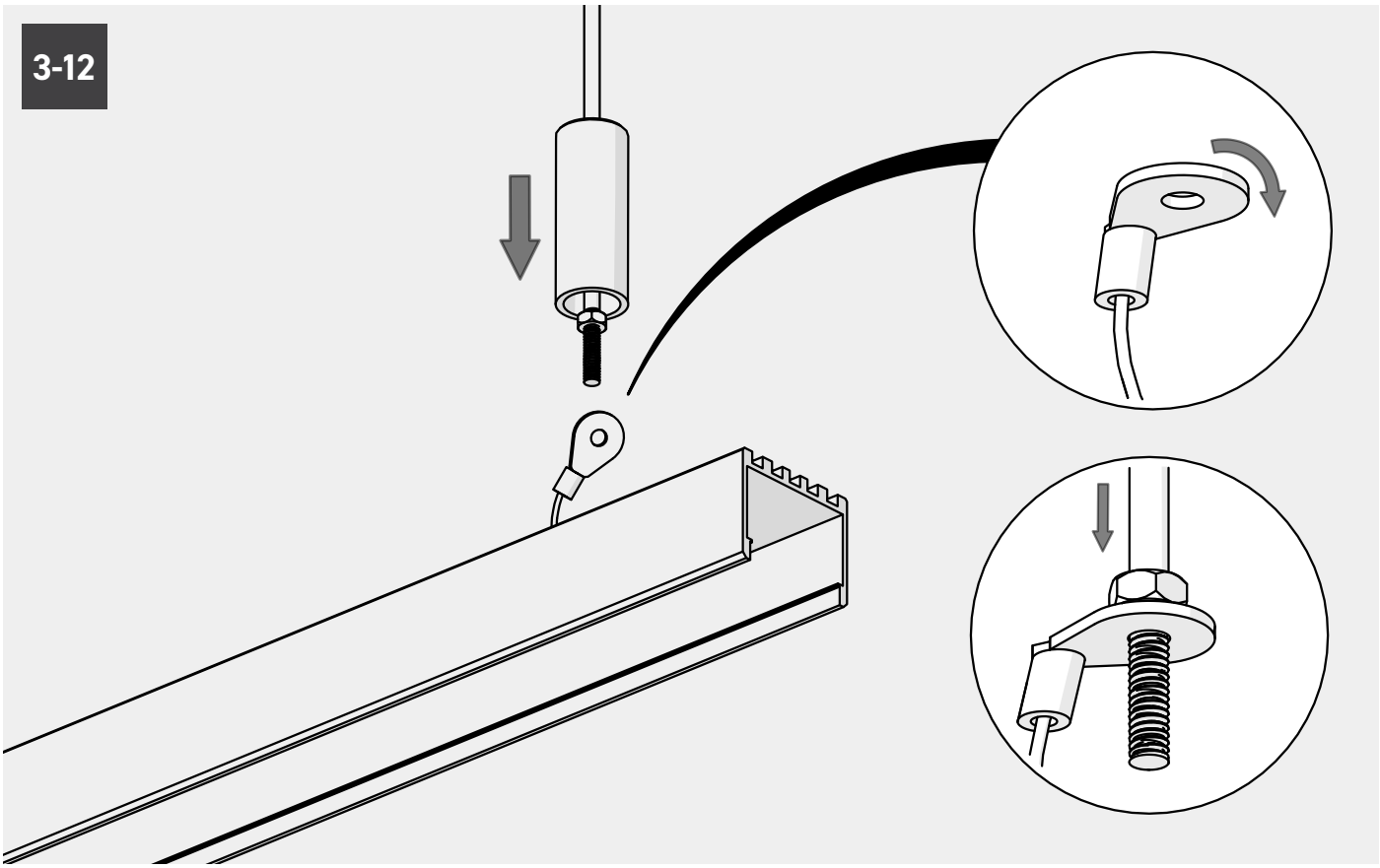

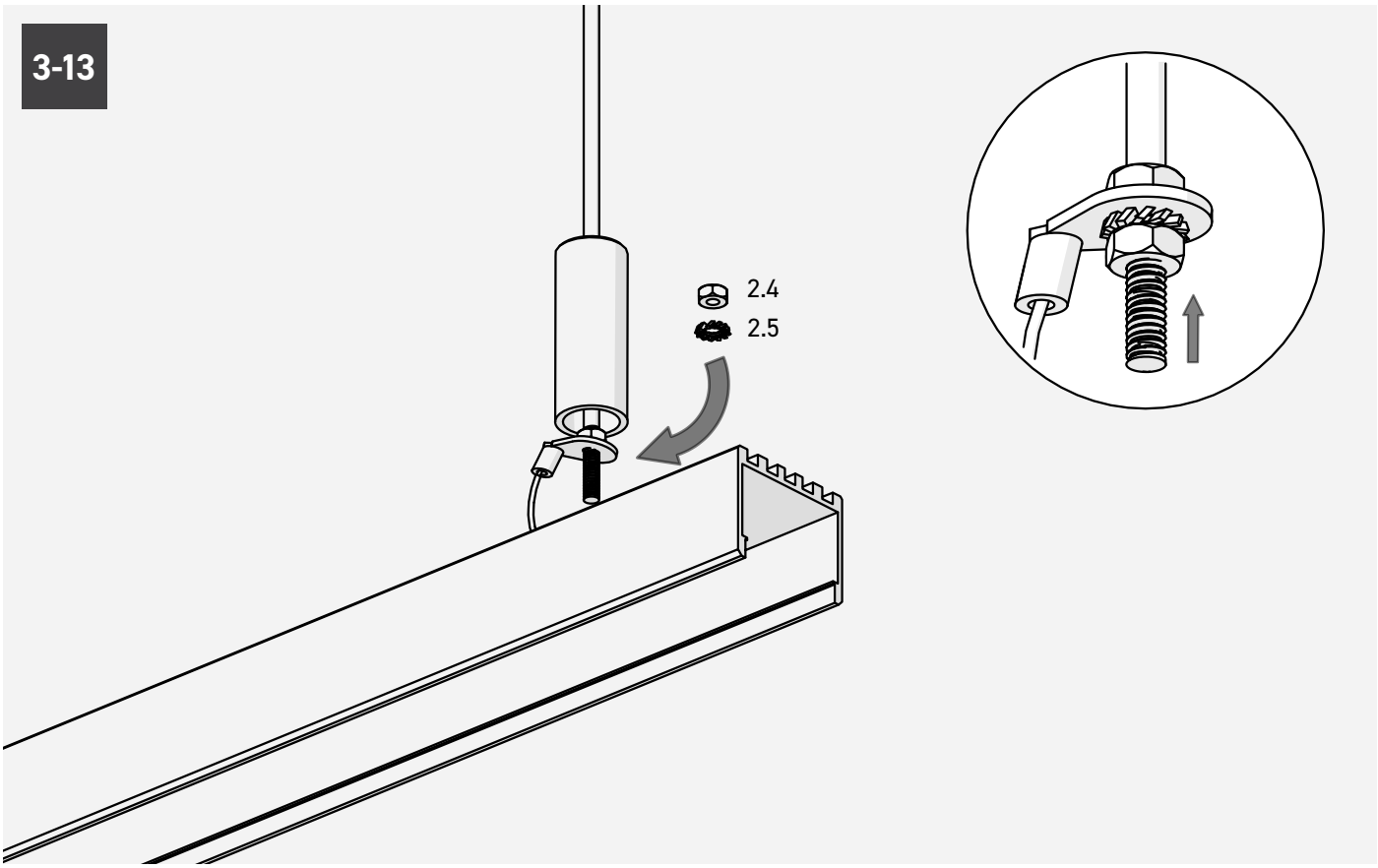
3-13
2.4
2.5

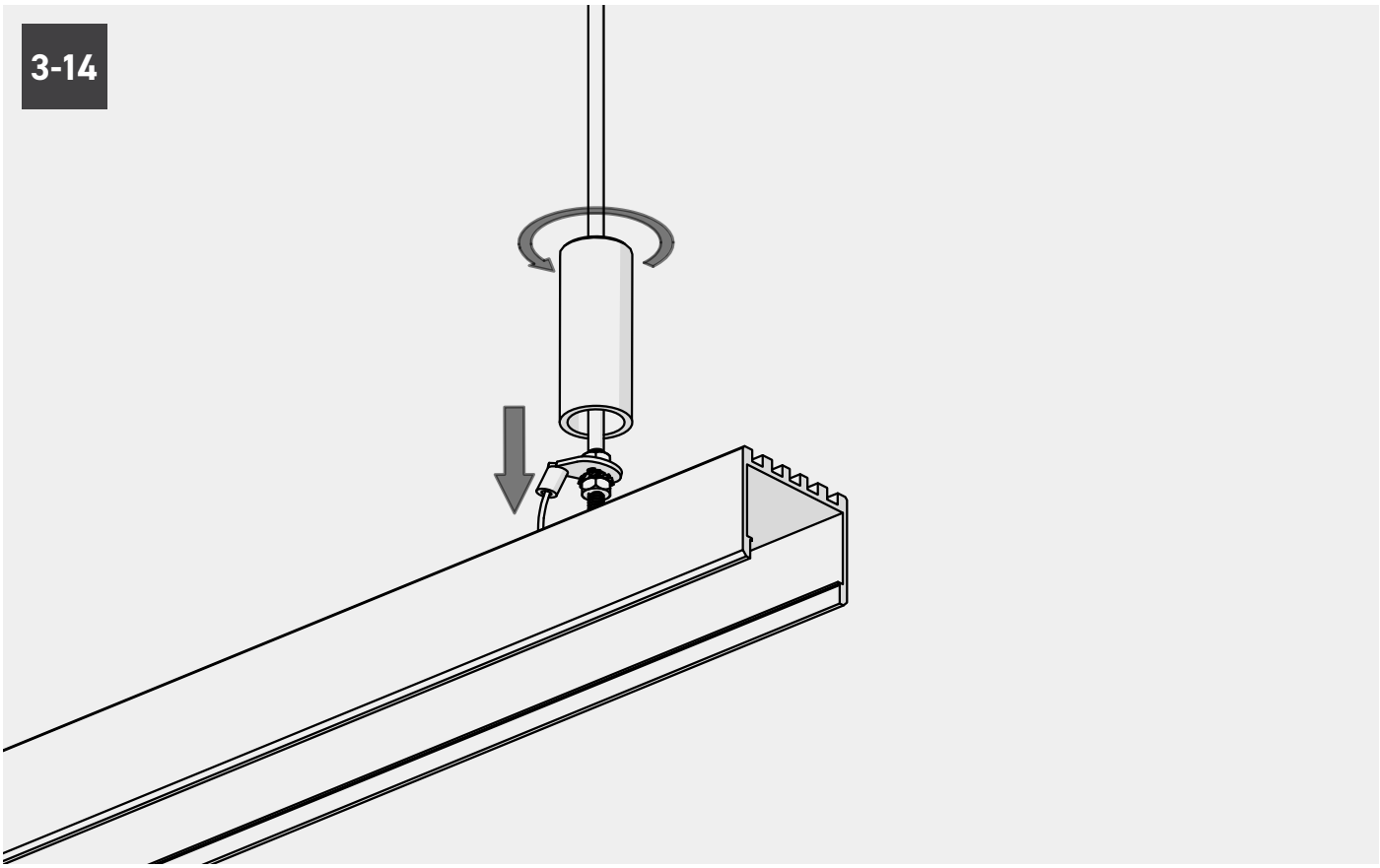
3-14

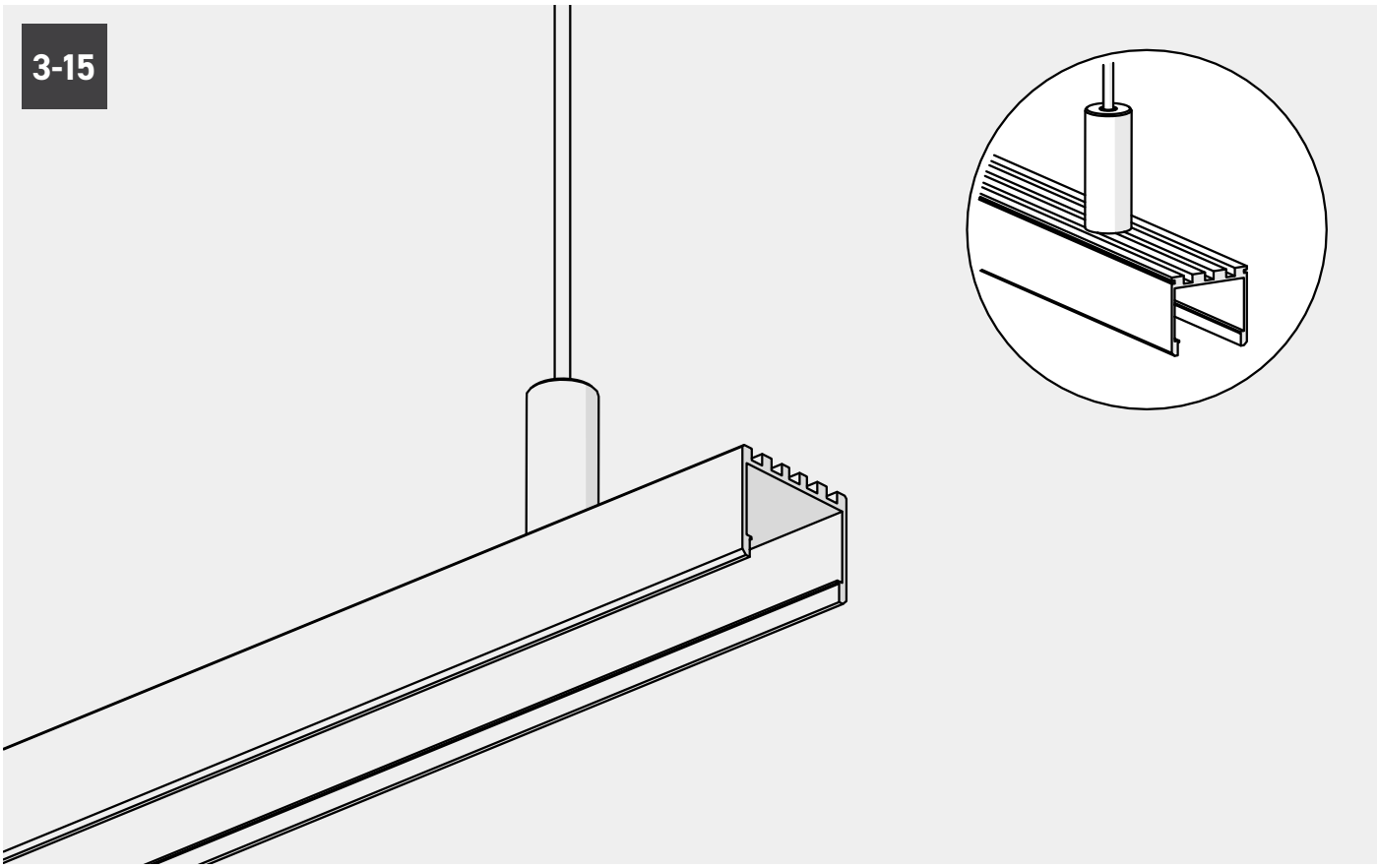
3-15

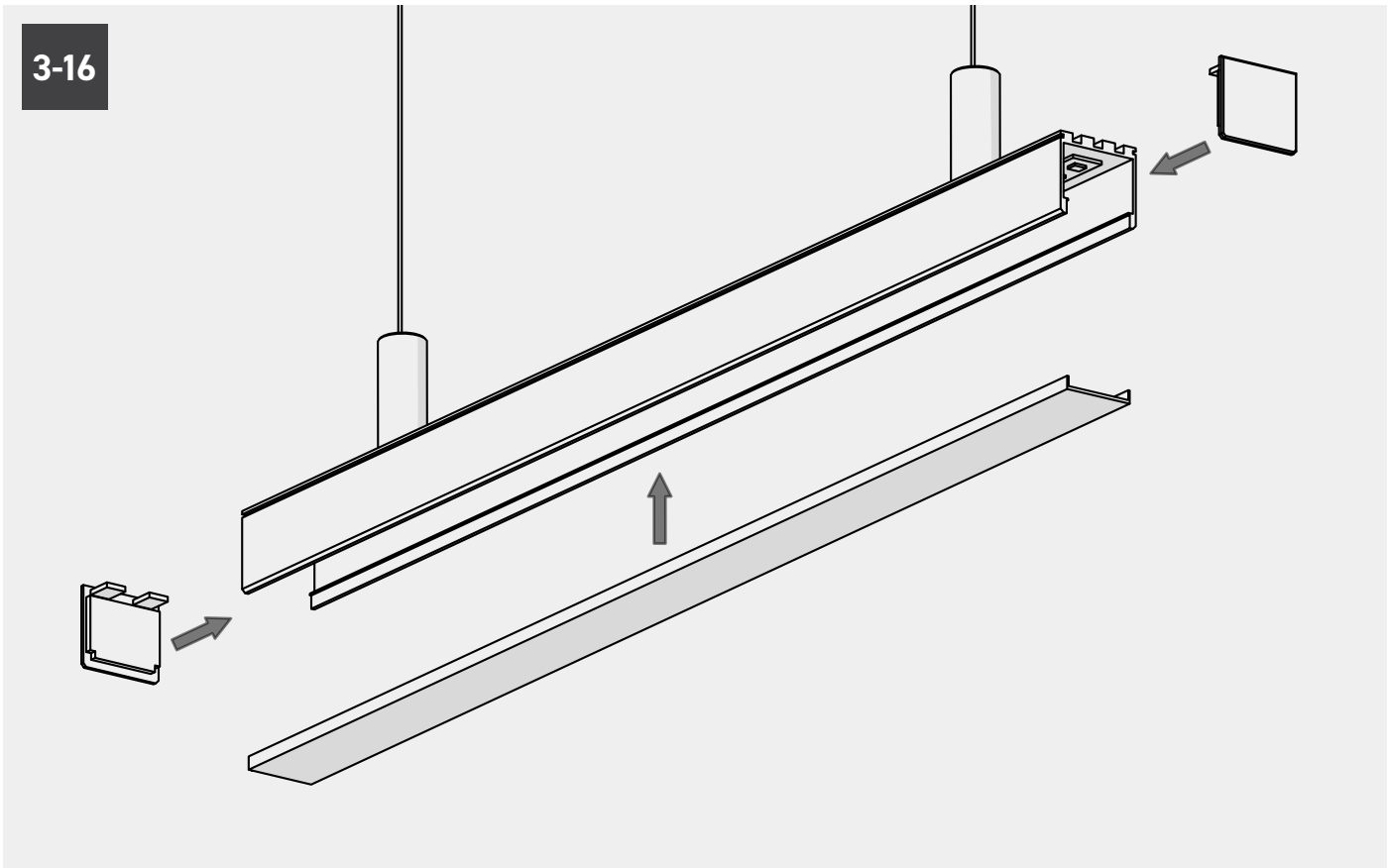
3-16

DLD ARCHITECTURAL

3-17

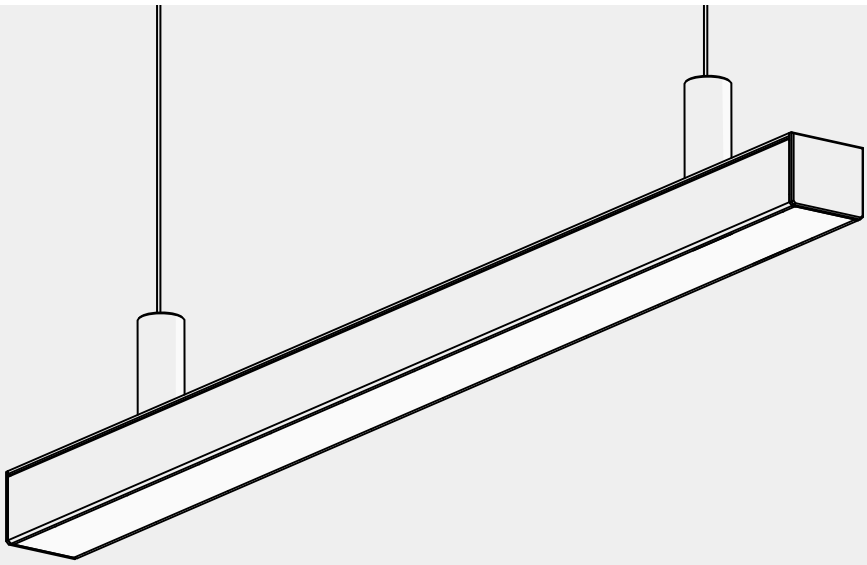

3-18

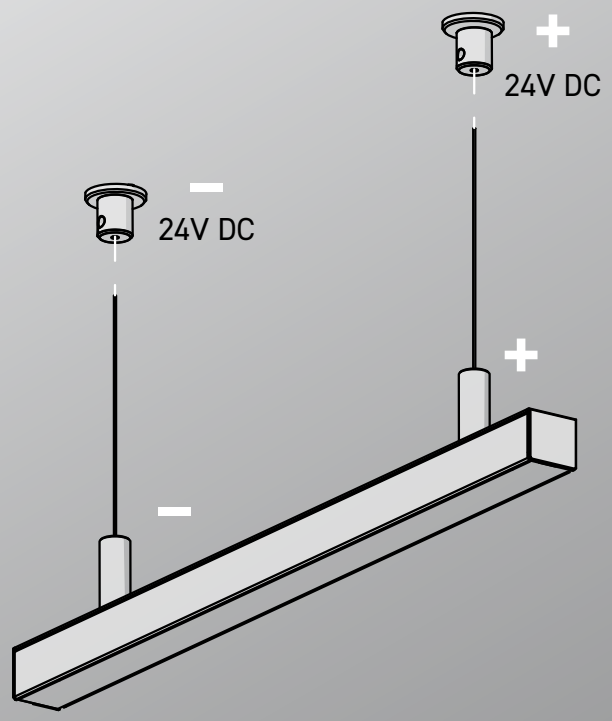

3-19

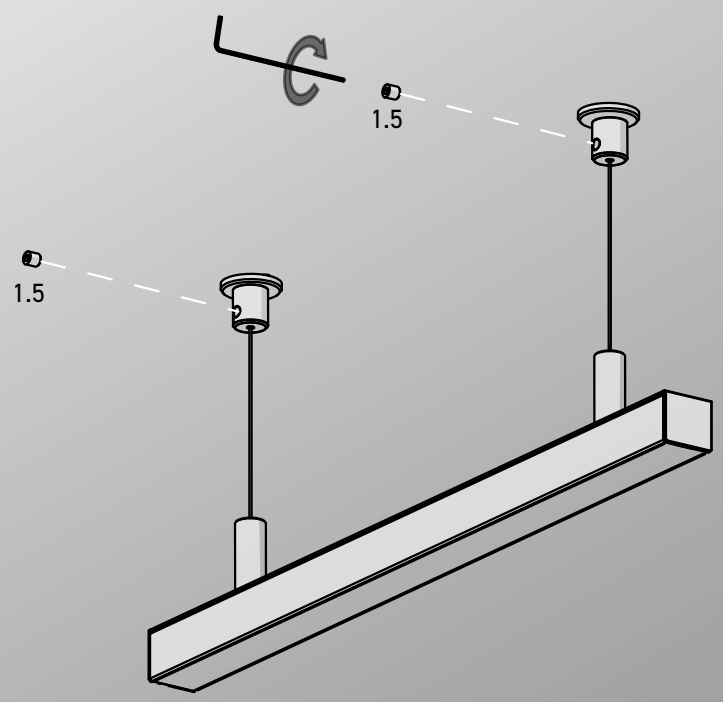

LUMALINE

SUSPENSION PENDANT PROFILE KIT
ASSEMBLY & INSTALLATION INSTRUCTIONS

DLD ARCHITECTURAL

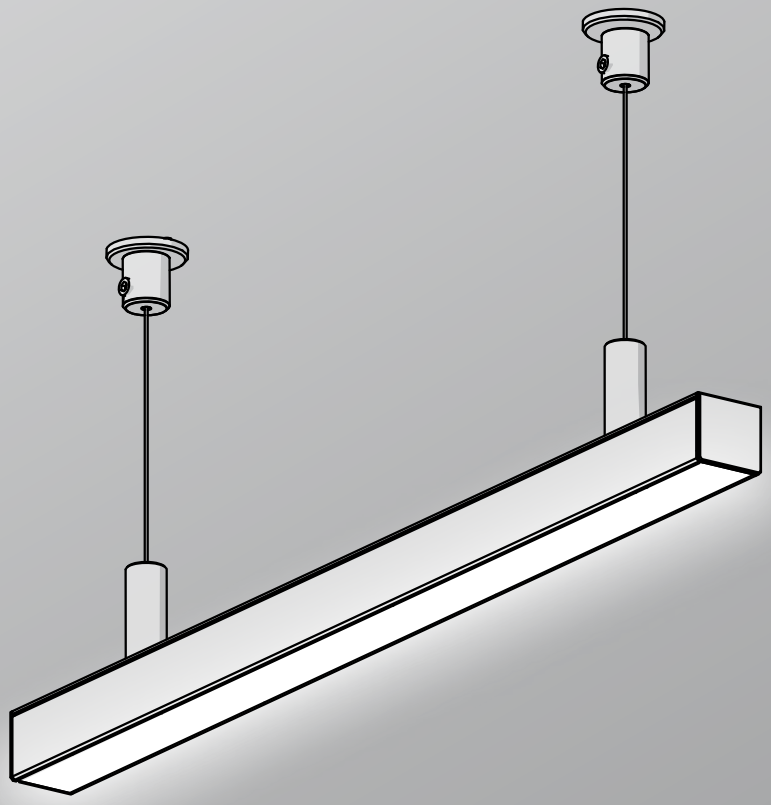

01189 889414

sales@darklightdesign.com

darklightdesign.com

Darklight Design
Unit 10 Brookside Business Centre
Church Road
Swallowfield
Reading
Berkshire
RG7 1TH