Zambelis LIGHTS

INDOOR WALL LIGHT

2548

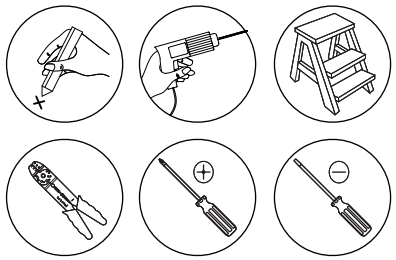

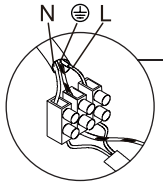

Connecting the Terminal Block

Connect main supply (**brown - L**ive, **blue - N**eutral) into terminal block making sure all connections are tight.

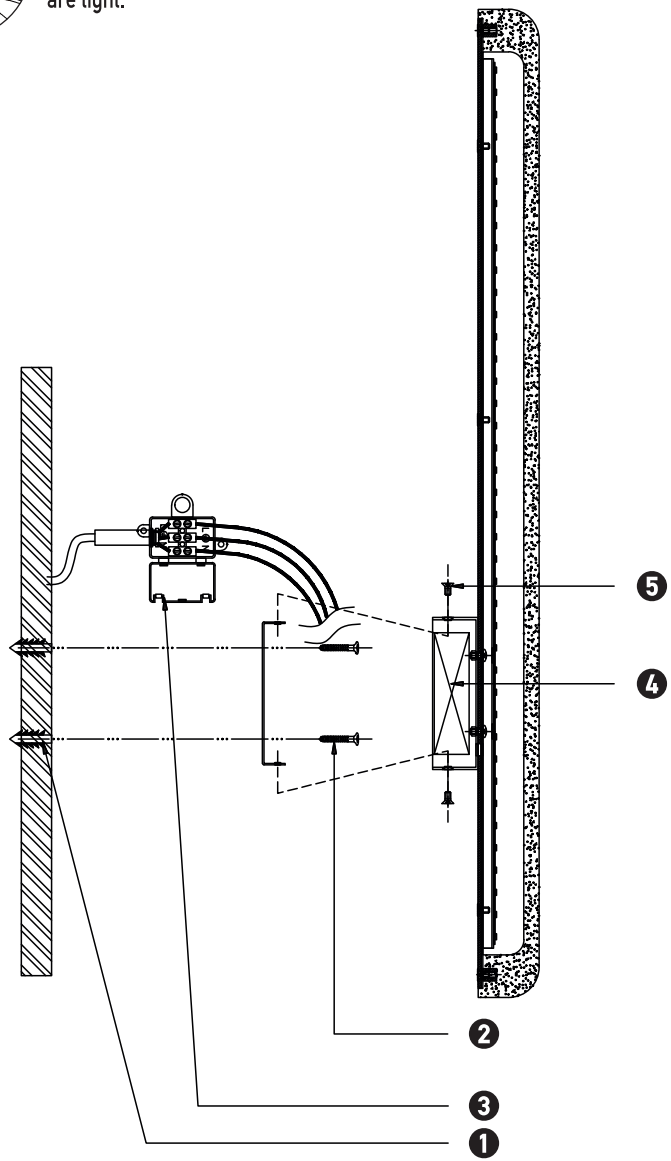

Please read instructions before commencing installation and retain for future reference.

SPECIFICATIONS

- **Lamp Type:** LED I 19W I 3000K I CRi 90 I Triac
- **Material:** Metal I Aluminium I Alabaster
- **Ingress Protection:** IP20 Protection against entry of solid objects greater than 12mm in diameter.

INSTALLATION INSTRUCTIONS

Electrical products can cause death, injury, or property damage. Maintenance and installation should only be carried out by a professional electrician.

- Ensure the main supply is switched off.
- Install the mounting anchors on the wall (1).
- Fix the mounting plate using M4 self-tapping screws. (2).
- Connect the positive and negative ground wires, and connect the power cord.(3) Making sure all connections are tight.
- Install the wall light (4).
- Fix the wall light to the mounting plate using M4 screws (5)
- Reconnect power.

WARNING

Make sure that the products are installed properly before connecting to electricity.
Do not cover the luminaire.
Do not exceed the maximum wattage rating of the lamp.
If the light source is contained in this luminaire (integrated LED), it shall only be replaced by the manufacturer, his service agent, or a similarly qualified person.

LED | CRI 90 | IP 20 | 0,5m

27012026