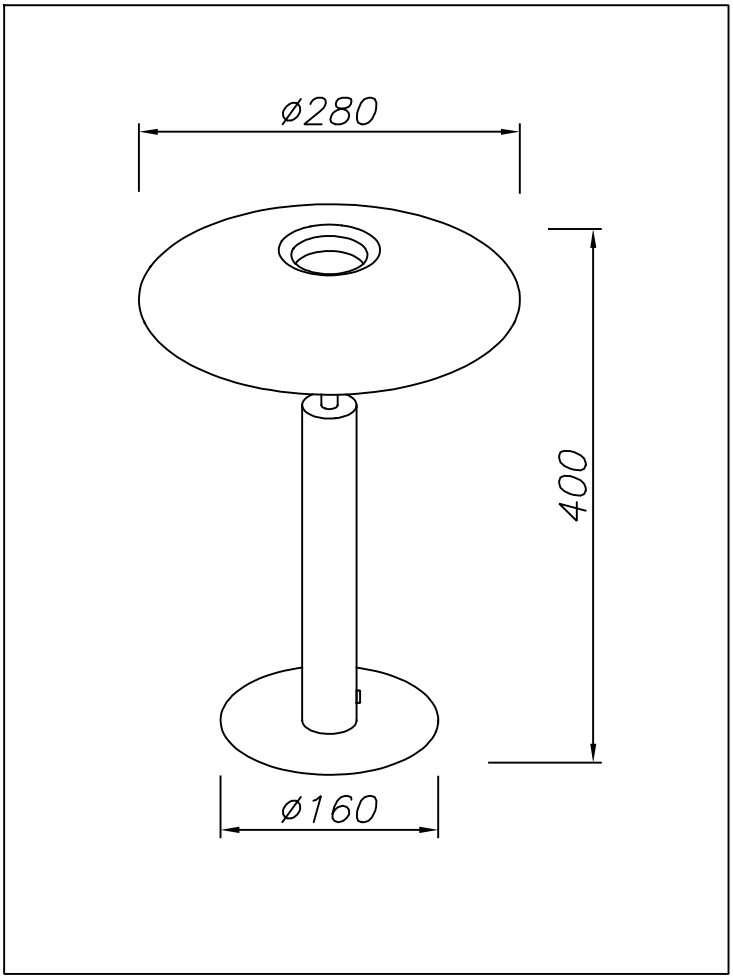
ø280
400
ø160

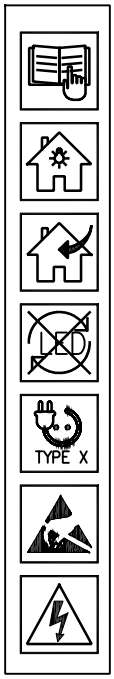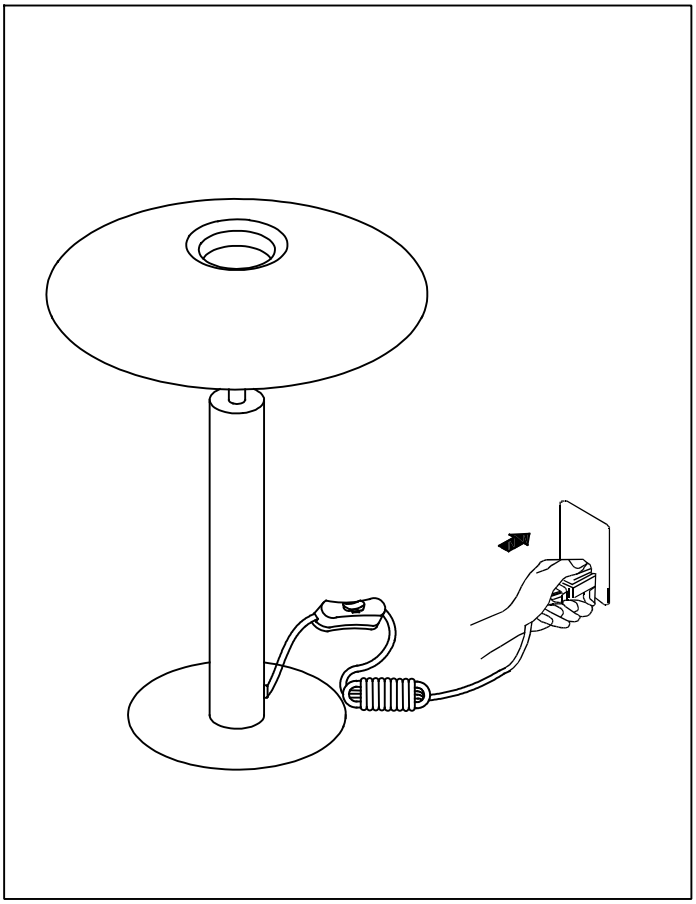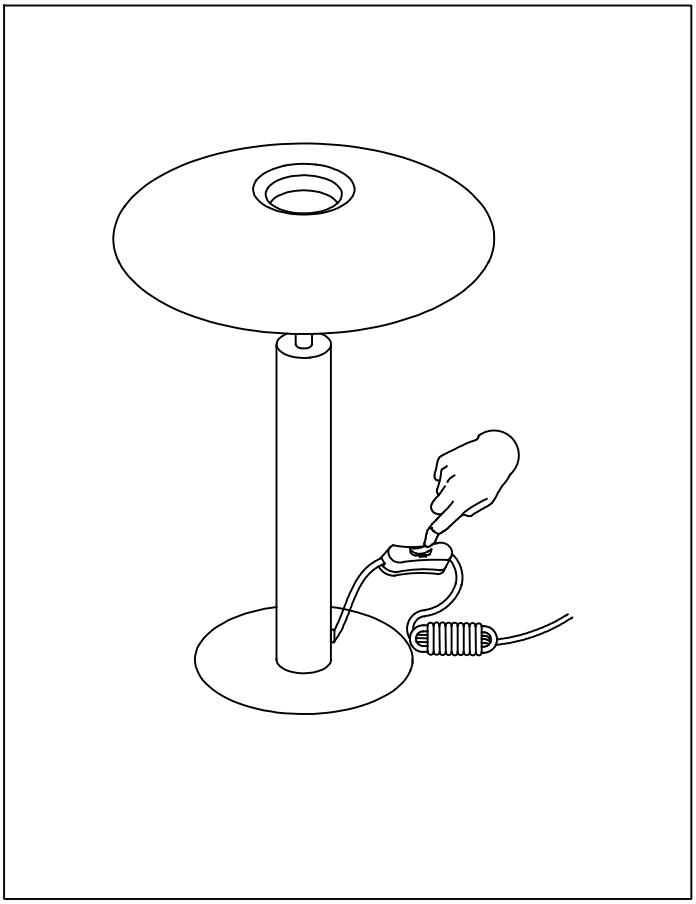
LED
TYPE X