MERAKI

CATENA WALL LIGHT

IP 20 CE

POWER	LED 12 W
LUMINOUS FLUX	1300 lm
WEIGHT	1,4 kg
BOX	510x510x170 mm
ELECTRONICS	ON/OFF DALI CASAMBI
TEMPERATURE	2700K 3000K 4000K

FINISH
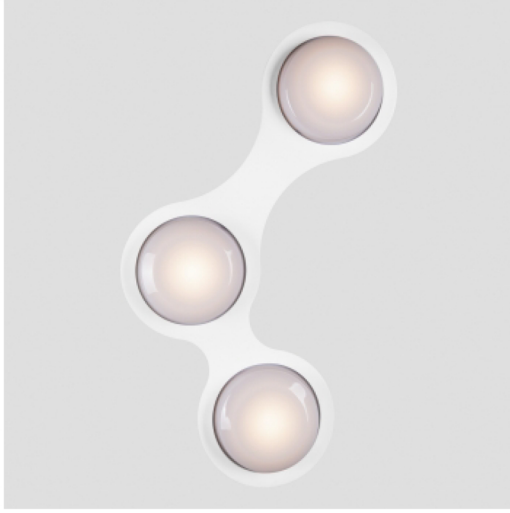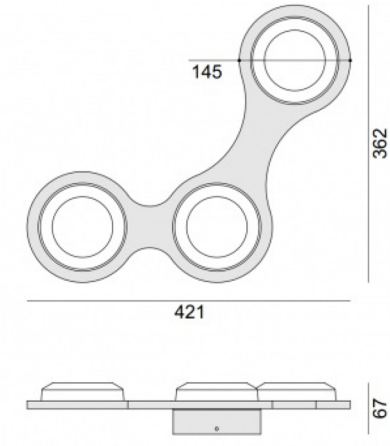
- white
- black
- grey