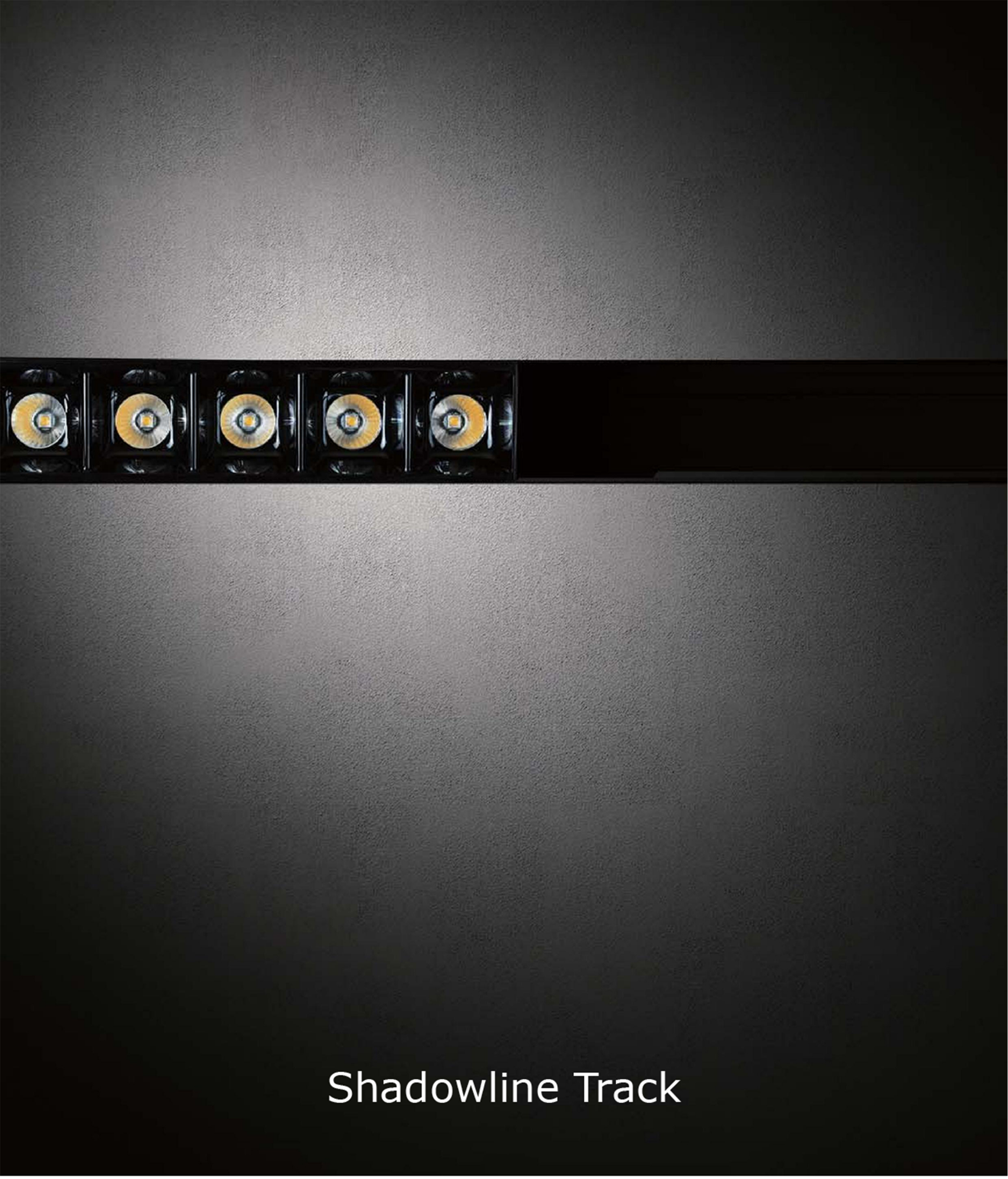

Contact Us here

01189 889414
enquiries@dld-contract.co.uk
dld-contract.co.uk

DLD CONTRACT

DLD Contract LTD
Unit 9 Brookside Business Centre
Church Road
Swallowfield
Reading
Berkshire
Rg7 1TH

Shadowline Track

Ultimate slim, perfect style

Innovative slim linear connecting system, a perfect combination between tracks and LED fixtures.
Not only emphasizing on characteristics and rapid installation of the modules, also creates simple and clean appearance.
Unique designed spot, panel and downlight modules are available for multitasking lighting requirement to the area.
This is a perfect solution to maximize lighting creativity.

ETL Approved

DLD
CONTRACT

Shadowline Track

Shadowline Track

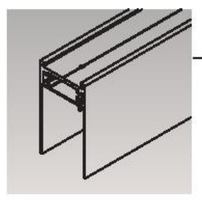

SHDT02-BK
SHDT02-WH
Surface mounted & Pendant track
P.15

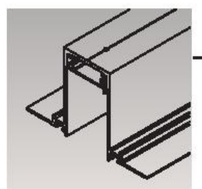

SHDR02-BK
SHDR02-WH
Trimless recessed track
P.15

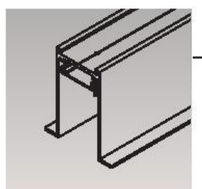

SHDF02-BK
SHDF02-WH
Trim recessed track
P.15

DLD CONTRACT

Shadowline Track Modules

	Series name	LED Consumption	Lumen	
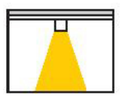	DM5 DM10 DM15	11W 22W 33W	1000 (lm) 2000 (lm) 3000 (lm)	P.23
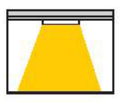	Linear 303 Linear 603 Linear 903	9.2W 18.4W 27.5W	472 (lm) 1197 (lm) 1428 (lm)	P.25
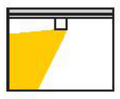	Wall Wash	11W	462 (lm)	P.27
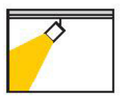	Led Spot 6w Led Spot 12w	6.4W 12.7W	626 (lm) 1114 (lm)	P.29
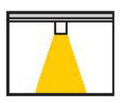	Twin Spot With Diffuser	4.6W	214(lm)	P.31
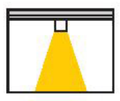	Twin Spot Without Diffuser	4.6W	399 (lm)	P.33
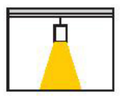	Pendant	6.4W	626 (lm)	P.35
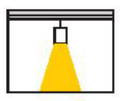	Hanging K10	22W	2000 (lm)	P.37
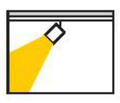	Adjustable K5	11W	1000 (lm)	P.39

DLD CONTRACT

Shadowline Track

Slim linear connecting system, can be recessed, surface mounted or pendant. Suitable for all kinds of interior environment.
The LED modules are designed with simple linear style, each series perform its own function, making lighting design easier than ever.

DLD CONTRACT

Shadowline Track

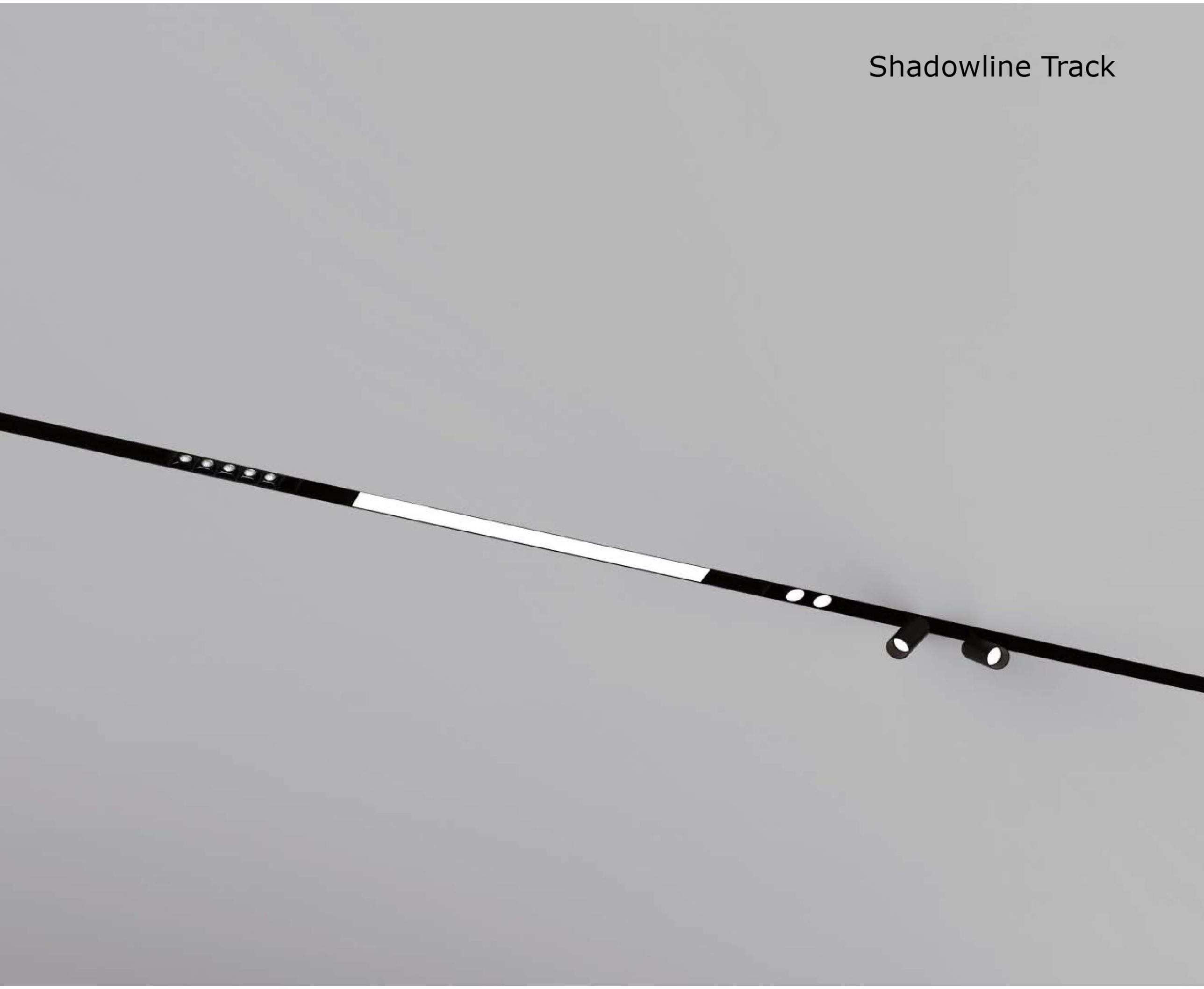

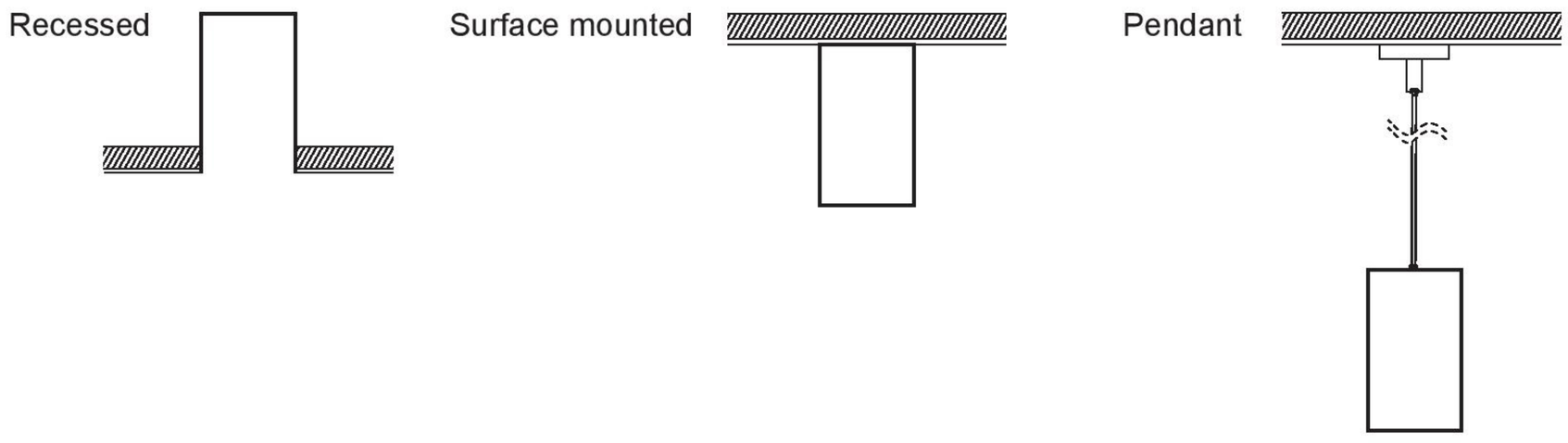

Shadowline Track

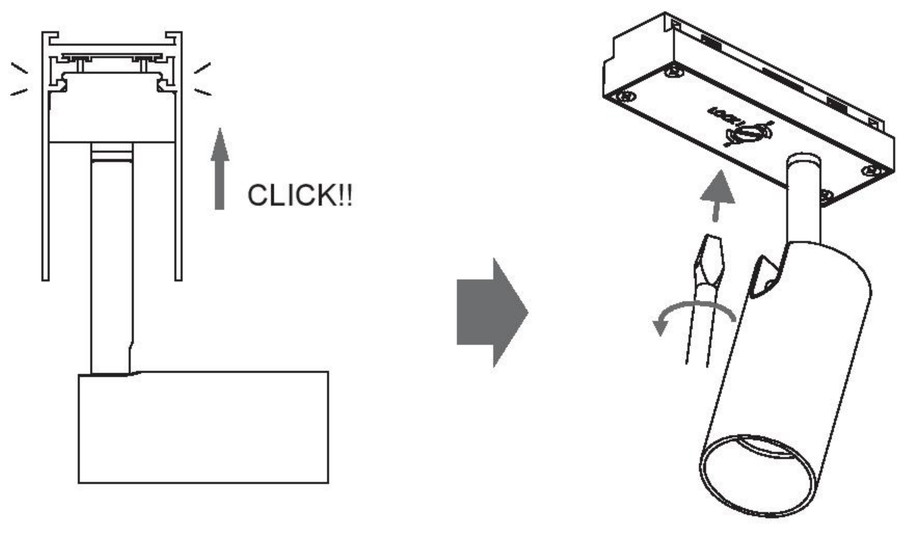

LED fixture installation is designed to be simple and convenient, just plug and play, tools-free, significant savings on installation and maintenance.
The track cover can be moved or cut to fit with the LED fixture to make overall appearance succinct.

Track section

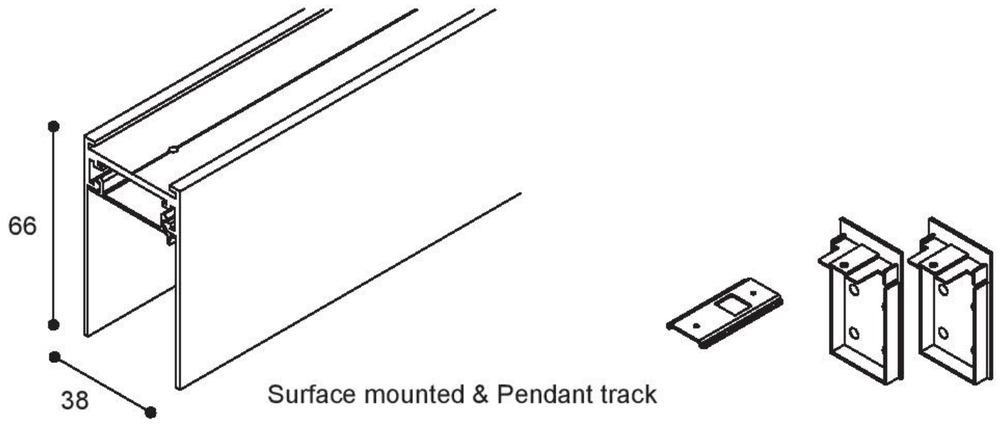

Product performance

Article number	L
SHDT02-BK SHDT02-WH	2100mm Track can be cut to size on site

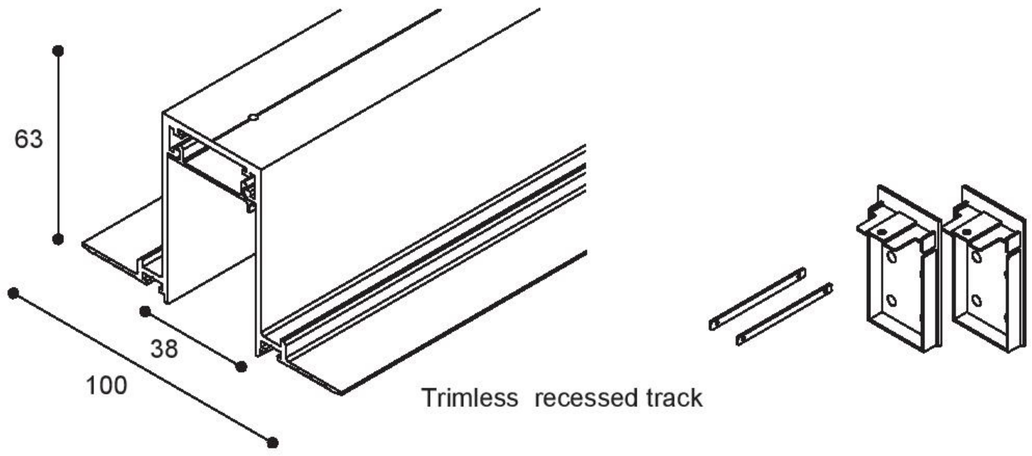

Article number	L
SHDR02-BK SHDR02-WH	2100mm Track can be cut to size on site

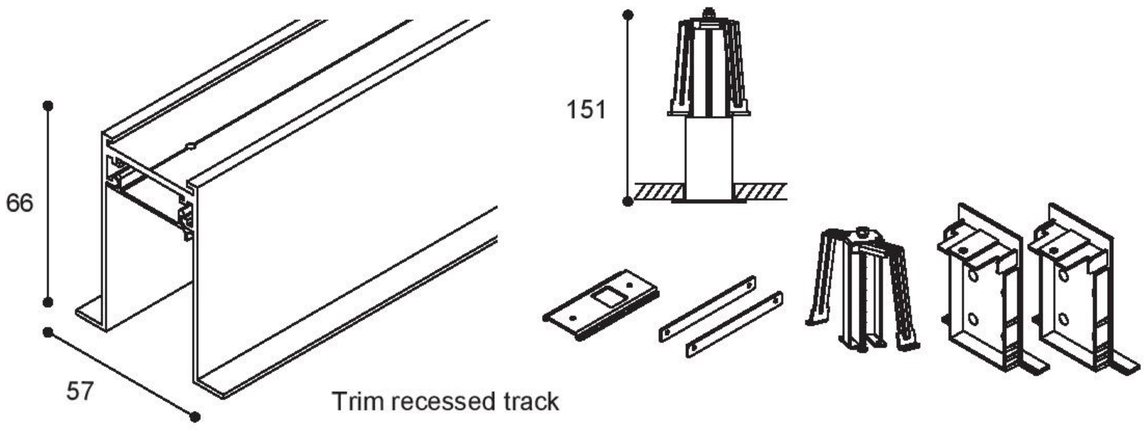

Article number	L
SHDF02-BK SHDF02-WH	2100mm Track can be cut to size on site

Colours ● Black ○ White

Accessories

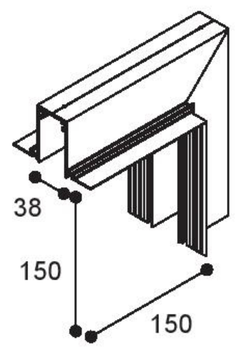

Article number: SDR-04
Type：Trimless recessed vertical corner

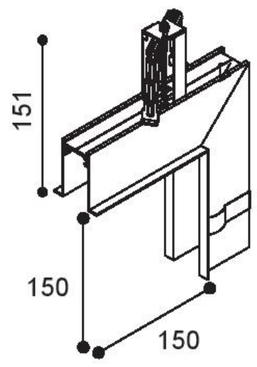

Article number: SDF-04
Type：Trim recessed vertical corner

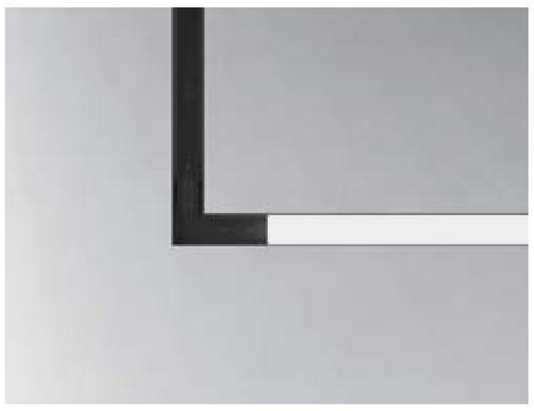

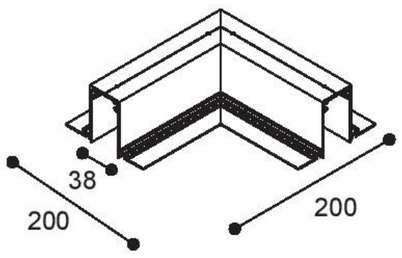

Article number：SDR-05
Type：Trimless recessed horizontal corner

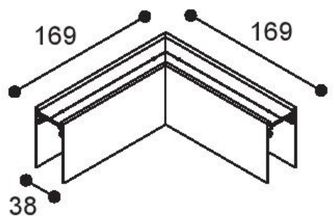

Article number：SDT-05
Type：Surface mounted & pendant horizontal corner

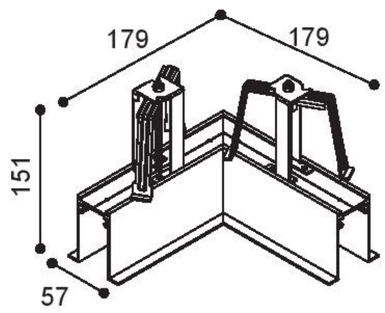

Article number：SDF-12
Type：Trim recessed horizontal corner

DLD CONTRACT

Shadowline Track Installation Guide

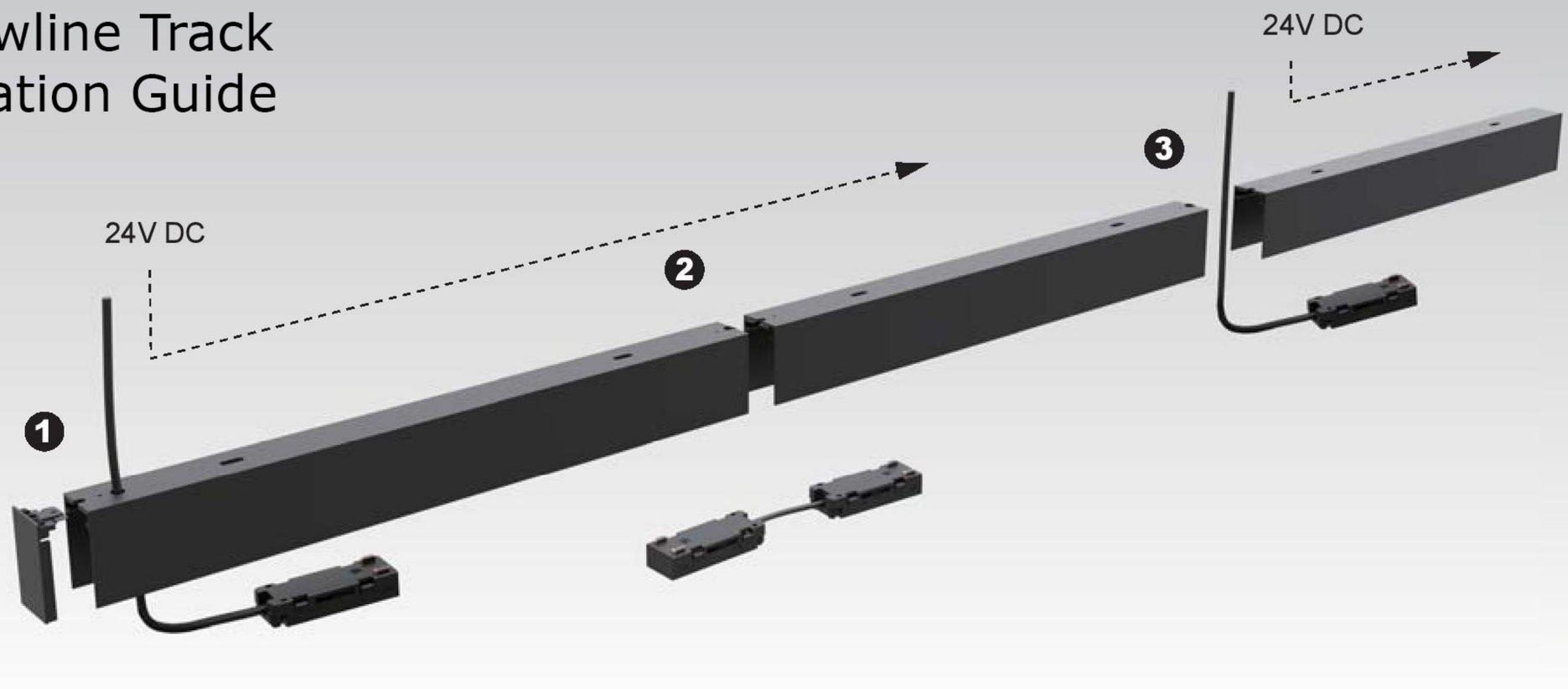

APPLICATION –
connecting power in different conditions for continuous connection

1 Single Power, Single Track

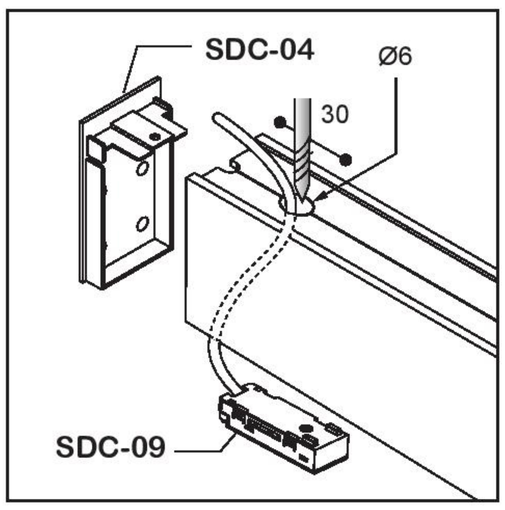

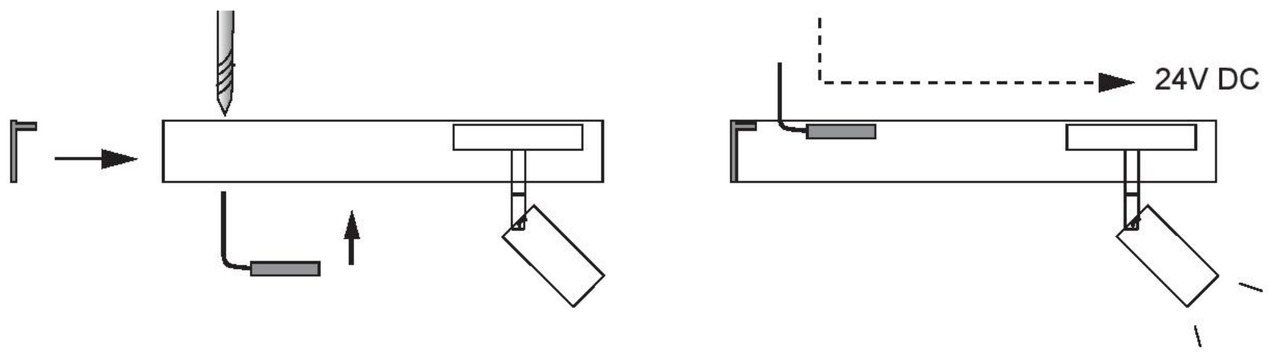

2 SIngle Power, Multiple Tracks

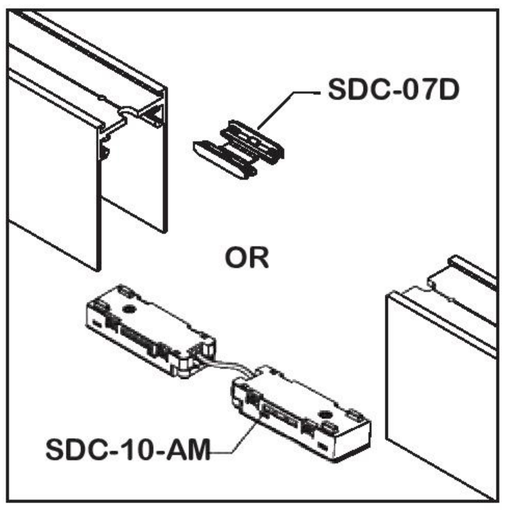

SDC-07D

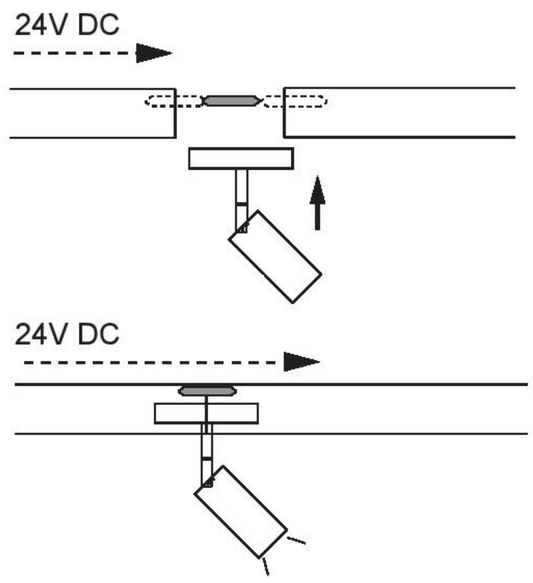

SDC-10-AM

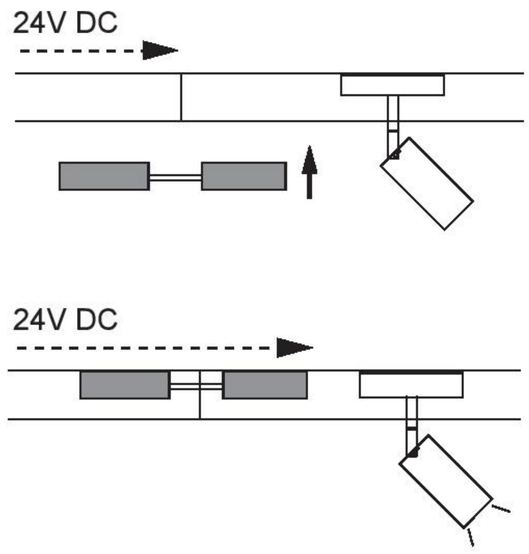

Using circuit joint (SDC-07D or SDC-10-AM) to connect between tracks

3 Multiple Powers, Multiple Tracks

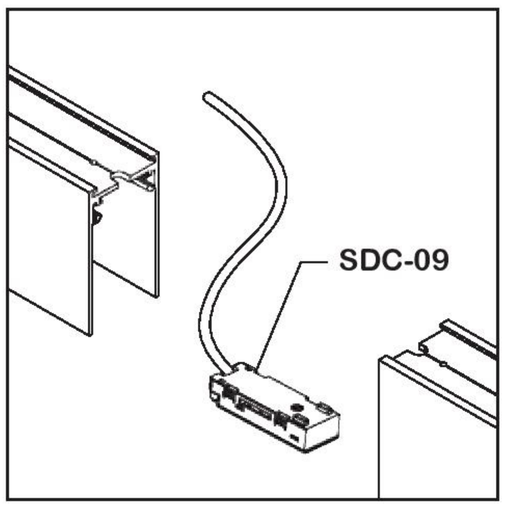

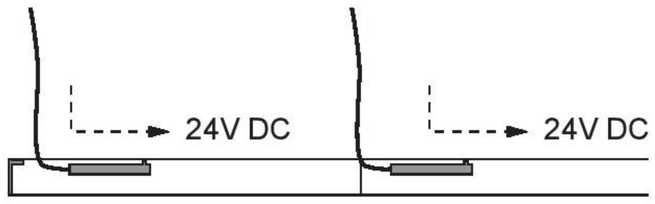

Using power joint (SDC-09) to connect more drivers

DLD CONTRACT

ACCESSORIES

Connections

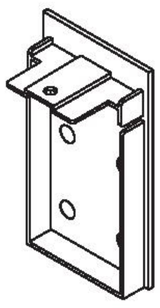

Article number：SHDC03-BK
Type：Surface mounted & pendant
& trimless recessed end cap
without power cord

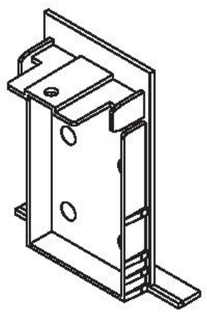

Article number：SHDC03A-BK
Type：Trim recessed end cap
without power cord

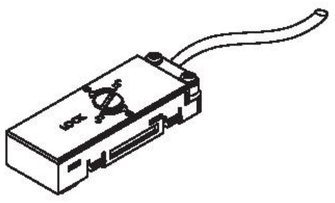

Article number：SHDC09-BK
Type：Power joint
Length : 200cm

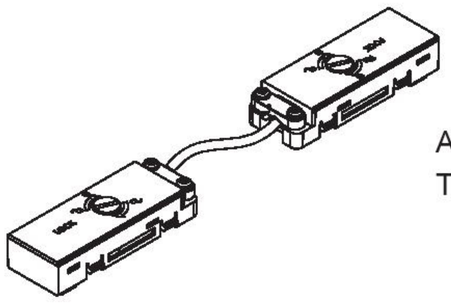

Article number：SDC-10-AM
Type：Circuit joint

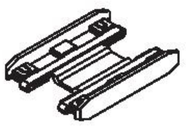

Article number：SDC-07D
Type：New circuit joint

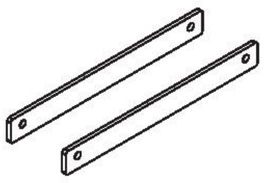

Article number：SDC-05
Type：Trim recessed & surface
mounted reinforced joint

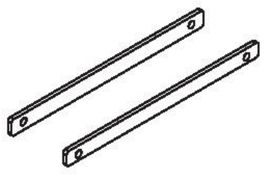

Article number：SDC-05A
Type：Trimless recessed
reinforced joint

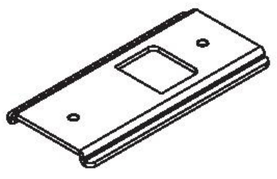

Article number：SDC-06
Type：Surface mounted & Pendant
reinforced plate

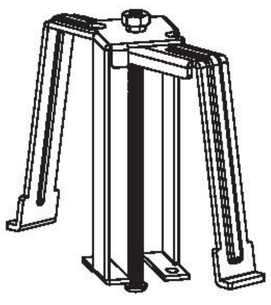

Article number：SDI-10
Type：Trim recessed clip

Pendant

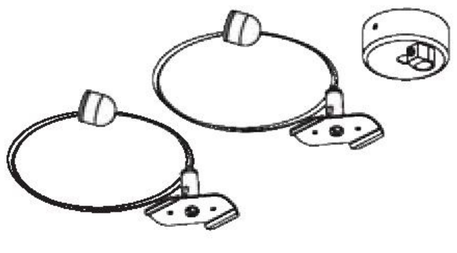

Article number：SDI-05
Type：Pendant kit for power connection
without power cord
Length : 150cm

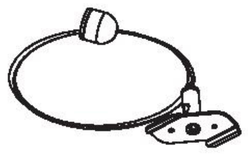

Article number：SDI-06
Type：Pendant kit without
power cord
Length : 150cm

Shadowline Track

Application Illustration

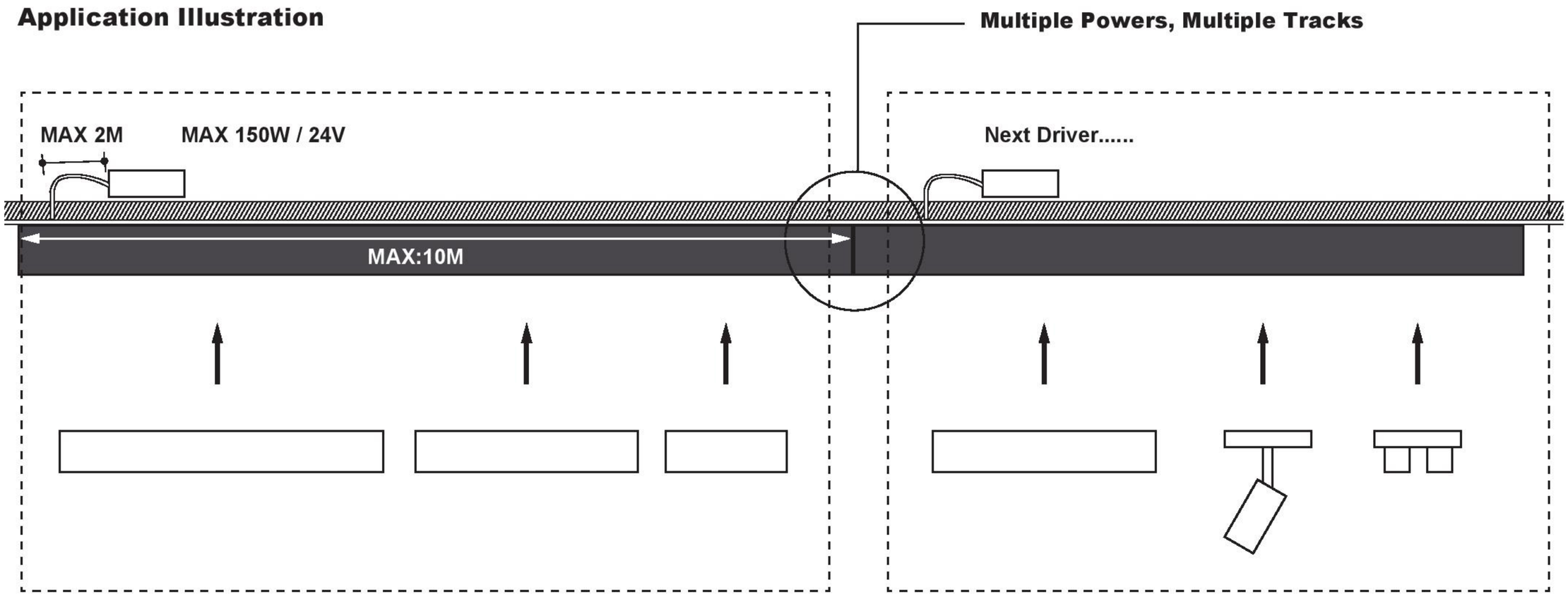

NOTE:

1. Max wattage linkable per loop for 24VDC is 150W.
2. Max length of track linkable per loop is 10M , and the max cable length between driver and track is 2M.
3. Dimming modules are compatible to PWM dimming driver only.
4. To use drivers not on recommended list , it require compatibility test before installation.
5. Tracks allows continuous linkable without limitation, also can divide into sections to light up individual area, making lighting application easy as 123.
6. Minimum voltage per loop is 22VDC (measure at the end of the loop), under 22VDC per loop might cause abnormal.
7. Calculating max wattage connection, save 20% buffer for linear modules, and 25% buffer for other modules.
8. Use driver not in the recommended list might cause module flickering, unstable dimming and/or noise, even causing module failure.
9. When multiple drivers are use in the connection, make sure the connector without circuit is used to divide the loop.
10. When installation tracks (pipes), make sure measuring the voltage from SDC-09/SDC-10-AM with the driver connected first, without modules, to see if the voltage is 24VDC, then measure the track & SDC-09/SDC-10-AM to see if the voltage drop is ≦0.1V, if the voltage drop is over 0.1V, make sure the connector is secured properly, warpage is not allowed in the connection, also check the cleanliness of the copper connector, copper connector can be cleaned using alcohol.

Driver Installation

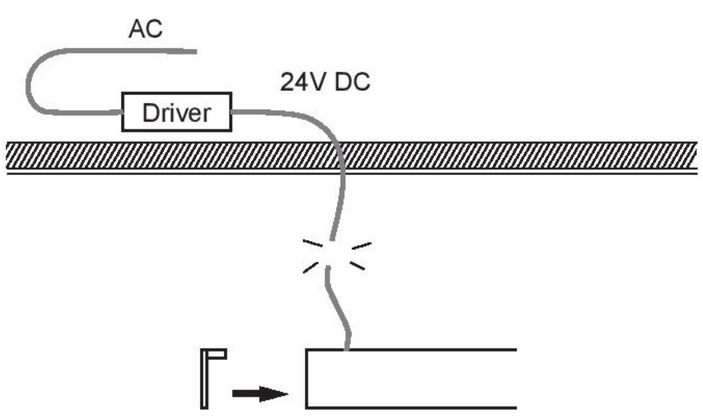

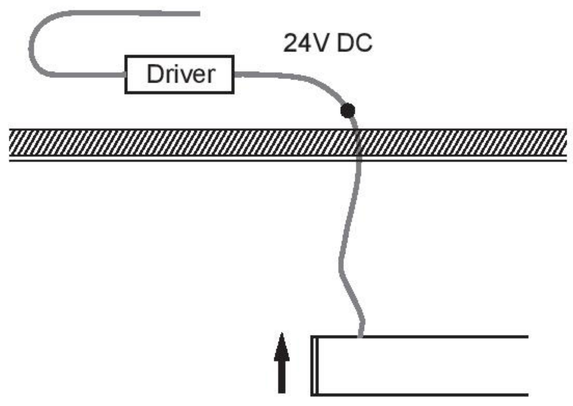

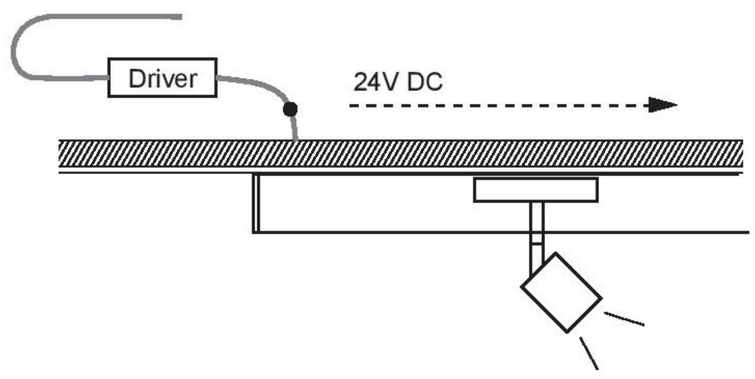

Driver needs to hide into the ceiling

DLD CONTRACT

Shadowline Track

DLD
CONTRACT

DM5, DM10, DM15

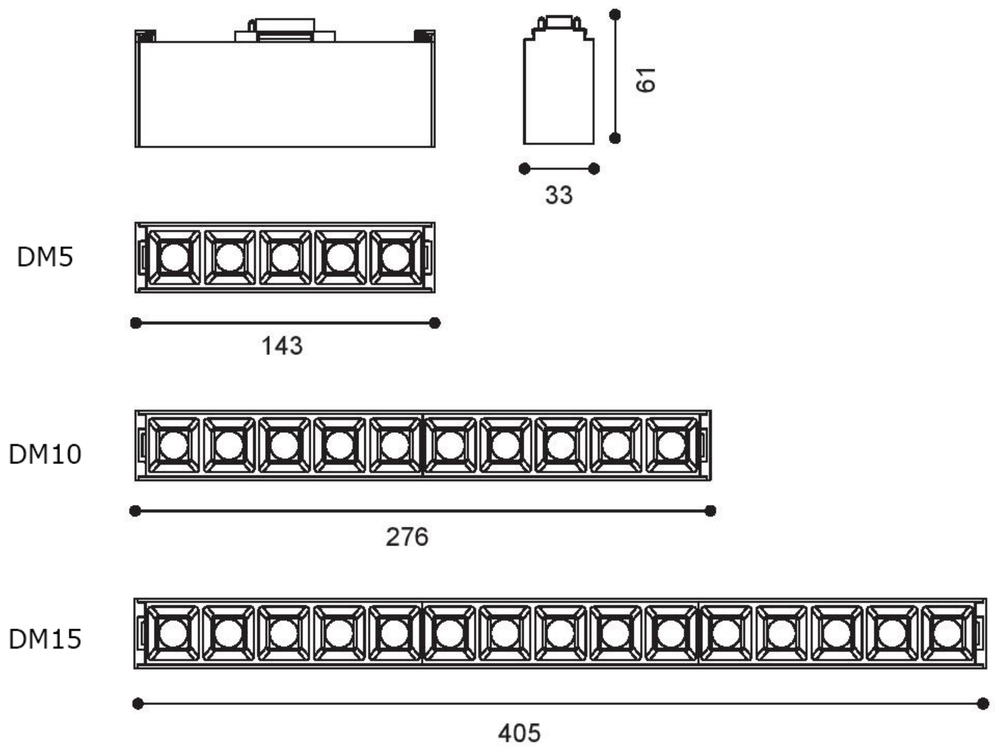

DM5

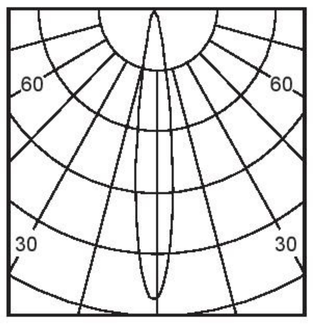

h(m)	D(m)	E(lx)
	15°	
1.0	0.25	7598
2.0	0.51	1899
3.0	0.76	844
4.0	1.02	474
5.0	1.28	303

DM10

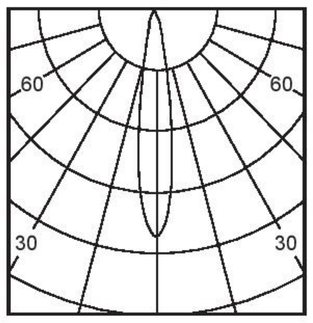

h(m)	D(m)	E(lx)
	15°	
1.0	0.29	11173
2.0	0.59	2793
3.0	0.88	1241
4.0	1.18	698
5.0	1.47	446

DM15

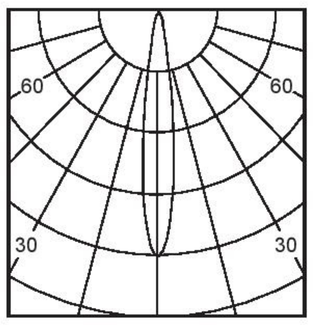

h(m)	D(m)	E(lx)
	15°	
1.0	0.25	20028
2.0	0.51	5007
3.0	0.76	2225
4.0	1.02	1252
5.0	1.28	801

Colours ● Black ○ White

Baffle : ● Black ○ White ◐ Piano black

Product performance

SLIMDUET-DM5

Article number	LED Consumption	Voltage	Lumen	Beam Angle	CCT/CRI	Locking Type
1817.406A-V	11W	24V DC	1000 (lm)	15°/30°/40°	30/90+	Push

SLIMDUET-DM10

Article number	LED Consumption	Voltage	Lumen	Beam Angle	CCT/CRI	Locking Type
1817.406B-V	22W	24V DC	2000 (lm)	15°/30°/40°	30/90+	Push

SLIMDUET-DM15

Article number	LED Consumption	Voltage	Lumen	Beam Angle	CCT/CRI	Locking Type
1817.406C-V	33W	24V DC	3000 (lm)	15°/30°/40°	30/90+	Push

IP20

DLD CONTRACT

Opal Linear Difuser- Available on Request

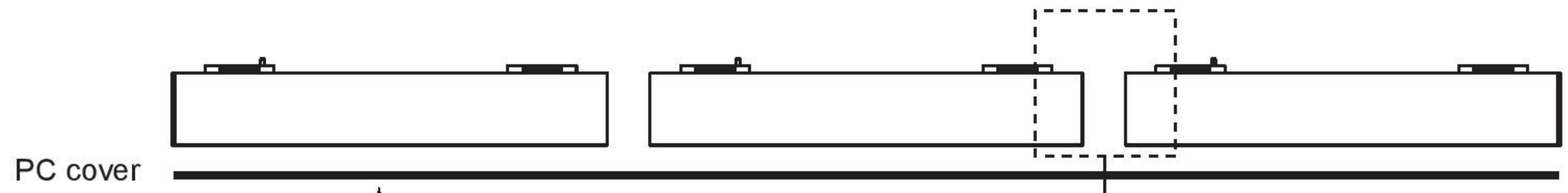

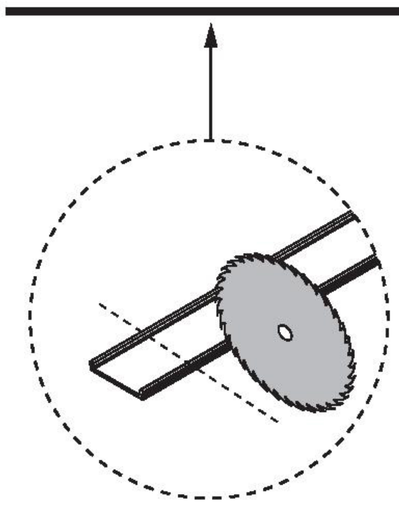

PC cover can be cut into required length

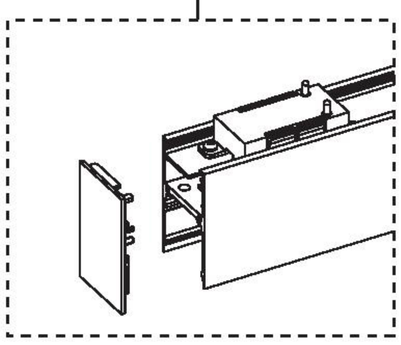

Remove the end cap from SLIMDUET-P module, the modules can be installed next to each other, then use longer PC cover to make seamless appearance.

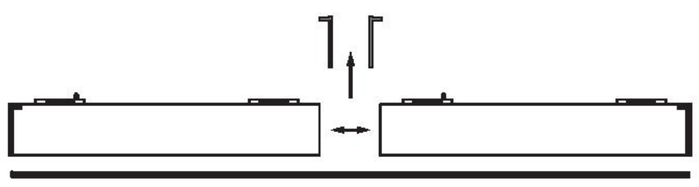

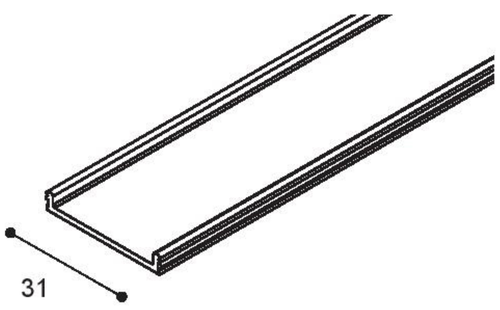

Colours White

Product performance

Article number	L
SDE-01	4000mm
SDE-02	15000mm

DLD CONTRACT

Linear Module 303,603,903

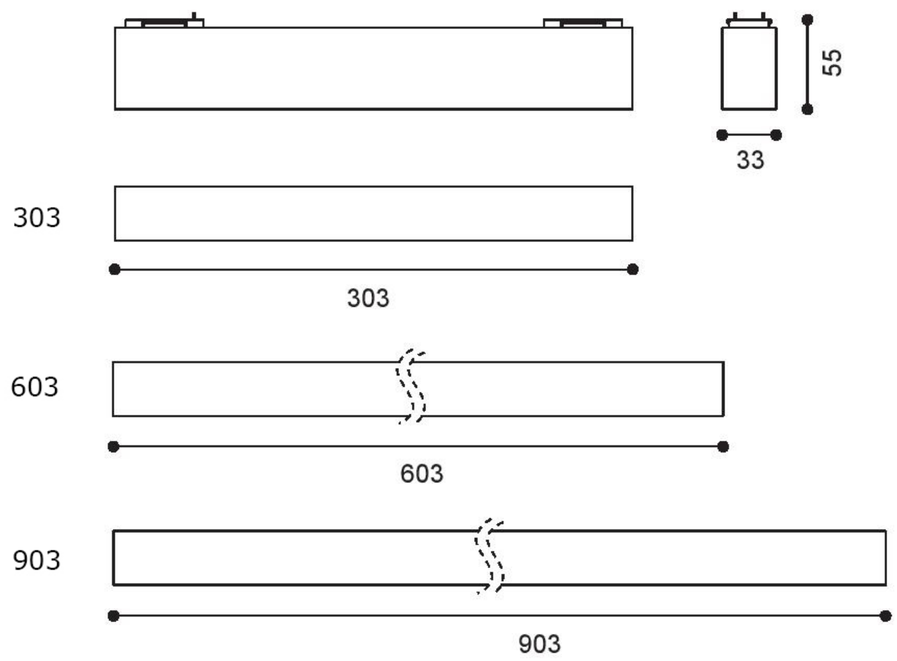

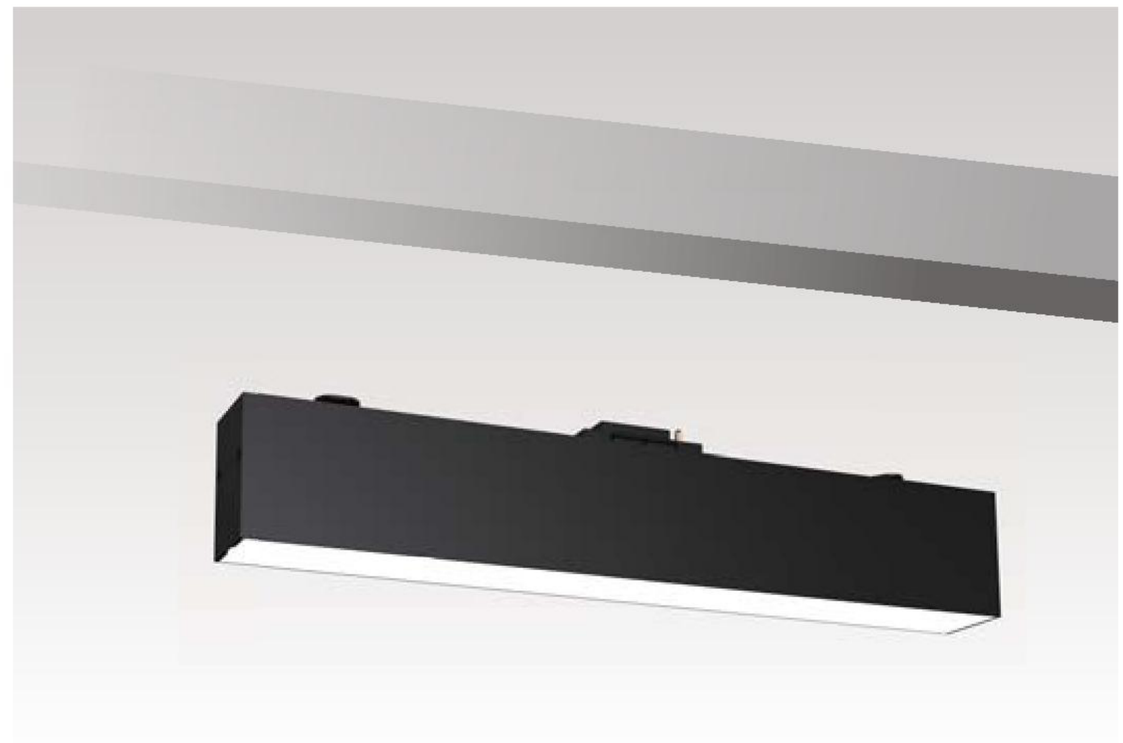

303

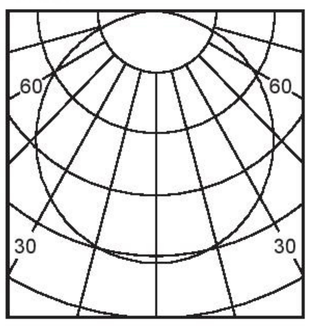

h(m)	D(m)	E(lx)
	115°	
1.0	3.01	164
2.0	6.02	41
3.0	9.04	18
4.0	12.05	10
5.0	15.06	6

603

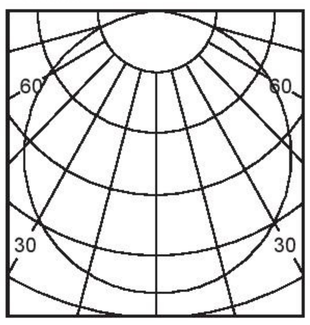

h(m)	D(m)	E(lx)
	115°	
1.0	3.03	415
2.0	6.06	103
3.0	9.09	46
4.0	12.13	25
5.0	15.16	16

903

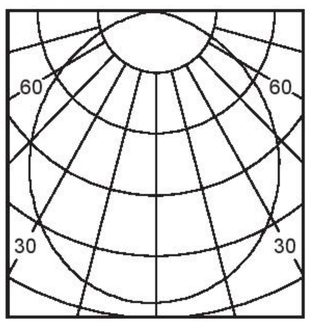

h(m)	D(m)	E(lx)
	115°	
1.0	2.36	538
2.0	4.73	134
3.0	7.10	59
4.0	9.47	33
5.0	11.84	21

Colours ● Black ○ White

Product performance

SLIMDUET-303

Article number	LED Consumption	Voltage	System Lumen	Beam Angle	CCT/CRI	Locking Type
1817.410A-V	9.2W	24V DC	472 (lm)	115°	30/80+	Twist

SLIMDUET- 603

Article number	LED Consumption	Voltage	System Lumen	Beam Angle	CCT/CRI	Locking Type
1817.410B-V	18.4W	24V DC	1197 (lm)	115°	30/80+	Twist

SLIMDUET- 903

Article number	LED Consumption	Voltage	System Lumen	Beam Angle	CCT/CRI	Locking Type
1817.410C-V	27.5W	24V DC	1428 (lm)	115°	30/80+	Twist

CASAMBI IP20

DLD CONTRACT

DLD
CONTRACT

Wall Wash

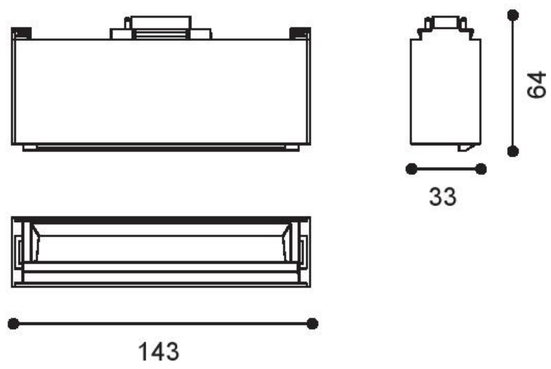

WB27K, WW27K
WB30K, WW30K
WB40K, WW40K

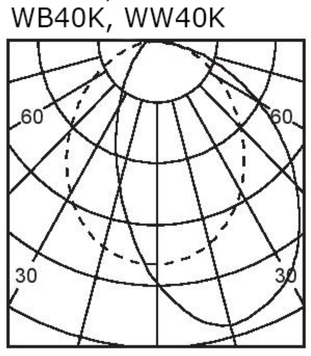

h(m)	D(m)	E(lx)
Wallwash		
1.0	1.35	251
2.0	2.71	62
3.0	4.07	27
4.0	5.43	15
5.0	6.79	10

Colours ● ○
Black White

Baffle : ●
Black

Product performance

Article number	LED Consumption	Voltage	System Lumen	Beam Angle	CCT/CRI	Locking Type
WB27K, WW27K WB30K, WW30K WB40K, WW40K	11W	24V DC	462 (lm)	wallwash	30/90+	Push

IP20

DLD CONTRACT

DLD
CONTRACT

LED Spot 6w, 12w

6w

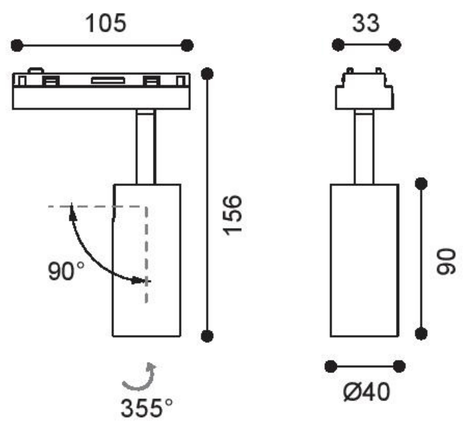

12w

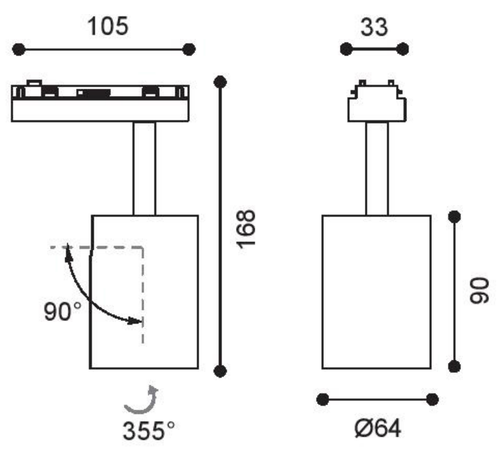

SM1- 6W

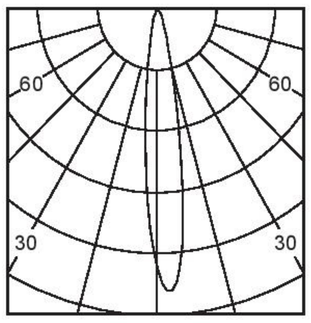

h(m)	D(m)	E(lx)
	15°	
1.0	0.25	3342
2.0	0.50	835
3.0	0.75	371
4.0	1.00	208
5.0	1.25	133

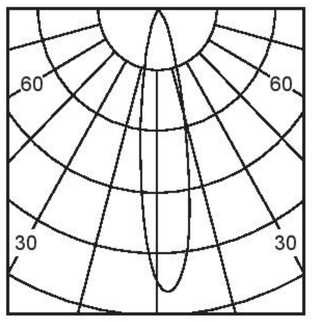

h(m)	D(m)	E(lx)
	20°	
1.0	0.34	1834
2.0	0.68	458
3.0	1.02	203
4.0	1.37	114
5.0	1.71	73

SM2- 12W

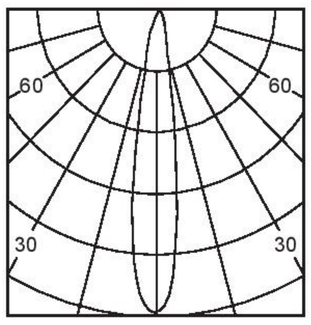

h(m)	D(m)	E(lx)
	16°	
1.0	0.28	4946
2.0	0.56	1236
3.0	0.84	549
4.0	1.13	309
5.0	1.41	197

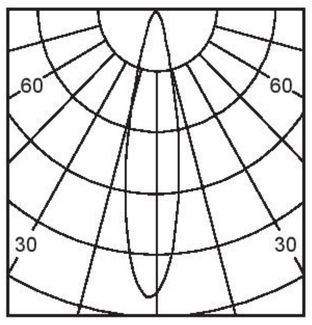

h(m)	D(m)	E(lx)
	21°	
1.0	0.37	3278
2.0	0.75	819
3.0	1.13	364
4.0	1.51	204
5.0	1.89	131

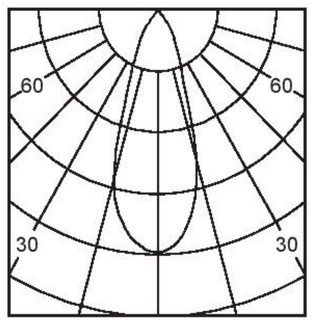

h(m)	D(m)	E(lx)
	35°	
1.0	0.63	1190
2.0	1.26	297
3.0	1.89	132
4.0	2.53	74
5.0	3.16	47

Colours ● Black ○ White

Baffle : ● Black ○ White ● Copper

Product performance

SLIMDUET-SM2- 12W

Article number	LED Consumption	Voltage	Lumen	Beam Angle	CCT/CRI	Locking Type
SM2- 12W	6.4W	24V DC	626 (lm)	15°/20°	30/90+	Twist

SLIMDUET-SM2- 12W

Article number	LED Consumption	Voltage	Lumen	Beam Angle	CCT/CRI	Locking Type
SM2- 12W	12.7W	24V DC	1114 (lm)	16°/21°/35°	30/90+	Twist

IP20 90° 355°

DLD CONTRACT

DLD
CONTRACT

Twin Spot With Diffuser

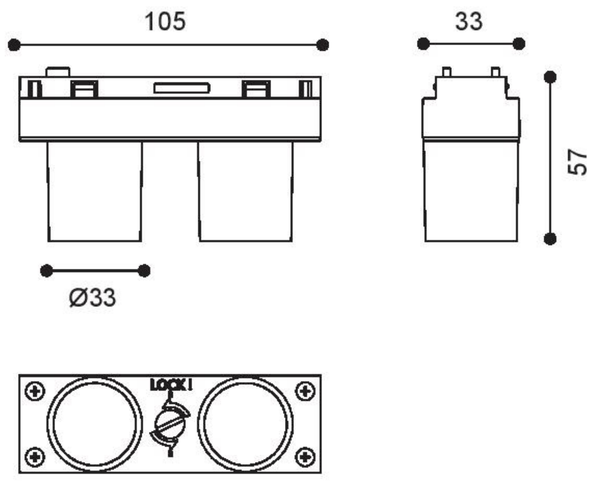

TBH110D27K

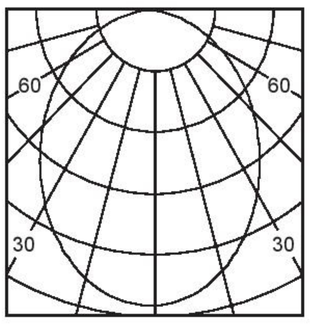

h(m)	D(m)	E(lx)
	110°	
1.0	2	96
2.0	4	24
3.0	6	10
4.0	8	6
5.0	10	3

Colours ● Black ○ White

Product performance

Article number	LED Consumption	Voltage	System Lumen	Beam Angle	CCT/CRI	Locking Type
TBH110D27K	4.6W	24V DC	214 (lm)	90°	30/90+	Twist

IP20

DLD CONTRACT

DLD
CONTRACT

Twin Spot

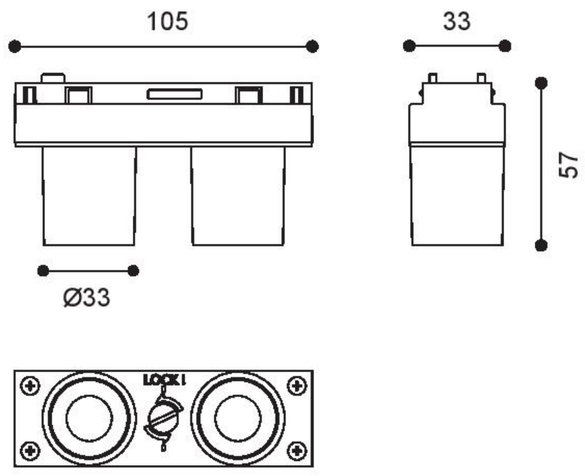

TBH -10D-27K
15D-30K
30D-40K

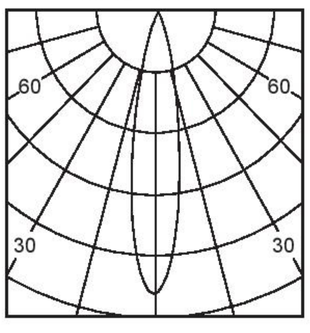

h(m)	D(m)	E(lx)
	20°	
1.0	0.34	2290
2.0	0.68	572
3.0	1.02	254
4.0	1.36	143
5.0	1.70	91

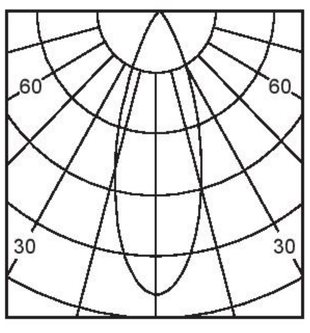

h(m)	D(m)	E(lx)
	30°	
1.0	0.62	753
2.0	1.25	188
3.0	1.88	83
4.0	2.51	47
5.0	3.14	30

Colours ● ○
Black White

Baffle : ● ○ ◐
Black White Piano black

Product performance

Article number	LED Consumption	Voltage	Lumen	Beam Angle	CCT/CRI	Locking Type
TBH 10D 27K 15D 30K 30D 40K	4.6W	24V DC	399 (lm)	19°/35°	30/90+	Twist

IP20

DLD CONTRACT

DLD
CONTRACT

Pendant

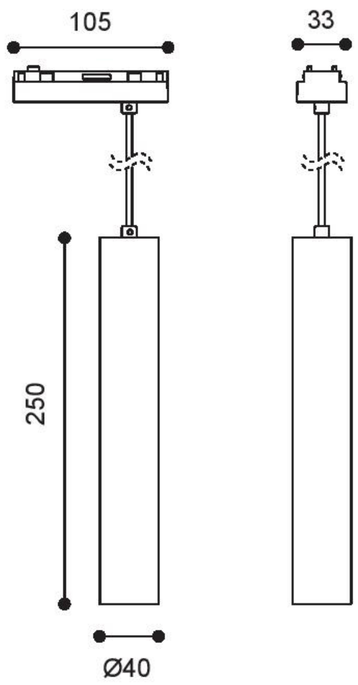

PMB - 20D - 27K - BK
- 30D - 30K - WW
- 40K

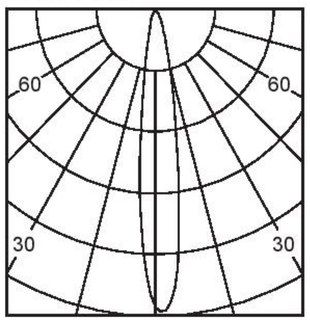

h(m)	D(m)	E(lx)
	10°	
1.0	0.25	3417
2.0	0.51	854
3.0	0.76	379
4.0	1.02	213
5.0	1.27	136

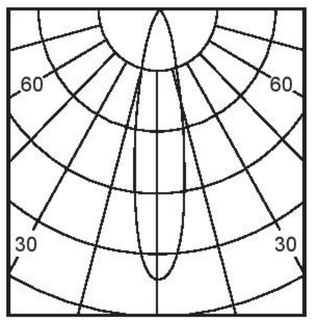

h(m)	D(m)	E(lx)
	20°	
1.0	0.37	1755
2.0	0.74	438
3.0	1.12	194
4.0	1.49	109
5.0	1.86	70

Colours ● Black ○ White

Baffle : ● Black ○ White Copper

Product performance

Article number	LED Consumption	Voltage	Lumen	Beam Angle	CCT/CRI	Locking Type
PMB - 20D - 27K - BK - 30D - 30K - WW - 40K	6.4W	24V DC	626 (lm)	10°/ 20°	30/90+	Twist

IP20

DLD CONTRACT

DLD
CONTRACT

Hanging DM10

Available on Request

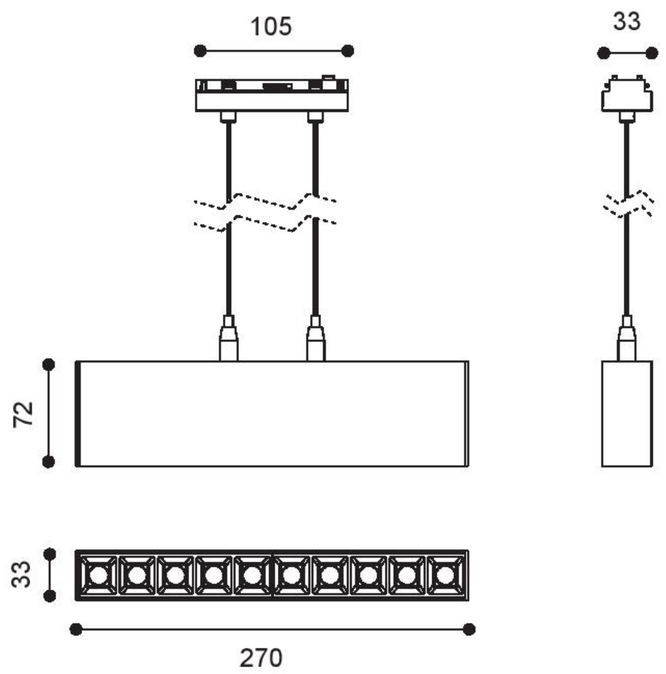

1817.411-V

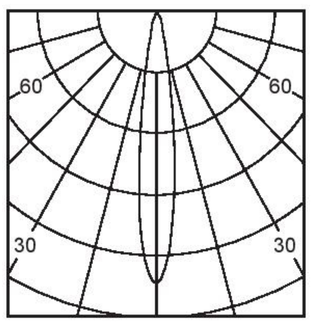

h(m)	D(m)	E(lx)
	15°	
1.0	0.26	12704
2.0	0.52	3176
3.0	0.78	1412
4.0	1.05	794
5.0	1.31	508

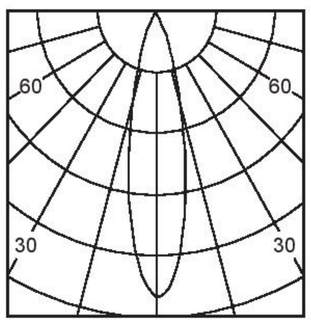

h(m)	D(m)	E(lx)
	25°	
1.0	0.40	6526
2.0	0.81	1632
3.0	1.22	725
4.0	1.62	407
5.0	2.03	261

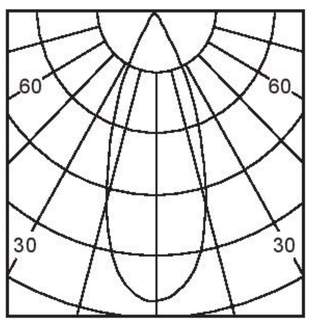

h(m)	D(m)	E(lx)
	40°	
1.0	0.68	3318
2.0	1.36	829
3.0	2.04	368
4.0	2.72	207
5.0	3.40	132

Colours ● Black ○ White

Baffle : ● Black ○ White ◐ Piano black

Product performance

Article number	LED Consumption	Voltage	Lumen	Beam Angle	CCT/CRI	Locking Type
1817.411-V	22W	24V DC	2000 (lm)	15°/25°/40°	30/90+	Twist

IP20

DLD CONTRACT

Adjustable DM5
Available on Request

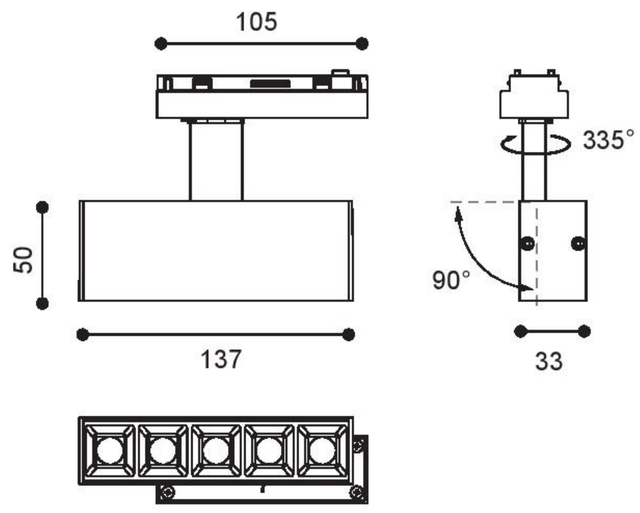

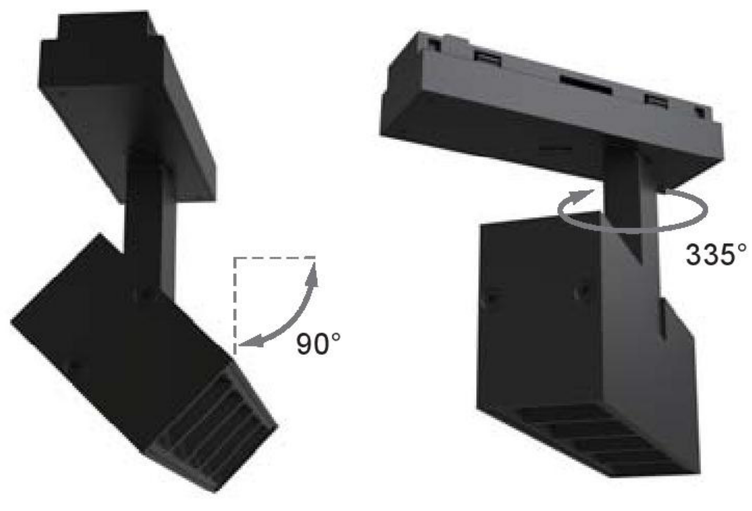

1817.413

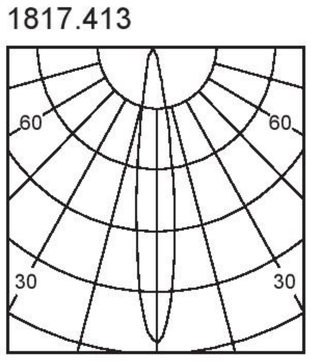

h(m)	D(m)	E(lx)
	15°	
1.0	0.25	7253
2.0	0.51	1813
3.0	0.77	805
4.0	1.03	453
5.0	1.29	290

Colours ● Black ○ White

Baffle : ● Black ○ White ◐ Piano black

Product performance

Article number	LED Consumption	Voltage	Lumen	Beam Angle	CCT/CRI	Locking Type
1817.413-V	11W	24V DC	1000 (lm)	15°/30°/40°	30/90+	Twist

IP20 90° 335°

DLD CONTRACT