TECHNICAL DATA SHEET

INDOX 3X50 LED 700LM CRI 80

REF N° 223 72 040 Adj. phase DIM 2700K
REF N° 223 72 140 Adj. phase DIM 3000K
REF N° 223 72 142 Adj. phase DIM Vibrant V830
REF N° 223 72 240 Adj. phase DIM 4000K
REF N° 223 62 040 Adj. DIM 1-10V 2700K
REF N° 223 62 140 Adj. DIM 1-10V 3000K
REF N° 223 62 142 Adj DIM 1-10V Vibrant V830
REF N° 223 62 240 Adj. DIM 1-10V 4000K

3xXicato LED - 3x8,3 W - 3x720lm @ 70°C
- 230V/50Hz - incl LED driver - IP20
36° - - 0.5m - - CE - 850°C - 2 SDCM
h=122 - 168x359 mm

INDOX 3X50 LED 500LM CRI 97

REF N° 223 72 940 Adj. phase DIM 2700K
REF N° 223 72 840 Adj. phase DIM 3000K
REF N° 223 72 842 Adj. phase DIM Vibrant V930
REF N° 223 72 740 Adj. phase DIM 4000K
REF N° 223 62 940 Adj. DIM 1-10V 2700K
REF N° 223 62 840 Adj. DIM 1-10V 3000K
REF N° 223 62 842 Adj DIM 1-10V Vibrant V930
REF N° 223 62 740 Adj. DIM 1-10V 4000K

3xXicato LED - 3x8,5 W - 3x500lm @ 70°C
- 230V/50Hz - inclusive LED driver
36° - - 0.5m - - CE - 850°C - 2 SDCM
h=122 - 168x359 mm

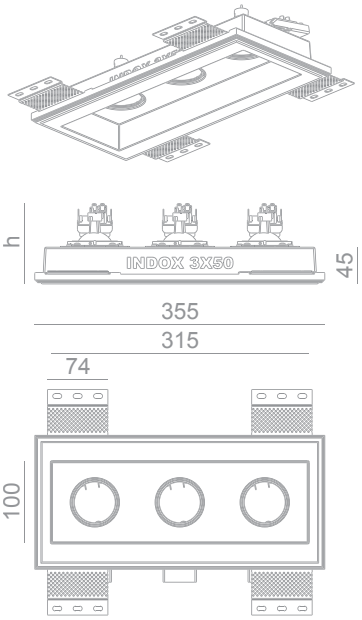

Included: installation system for gypsum ceiling 9 - 12 - 15 mm

INDOX 3X50 LED 700LM CRI 80 FIX IP54

REF N° 223 72 041 BATHROOM phase DIM 2700K
REF N° 223 72 141 BATHROOM phase DIM 3000K
REF N° 223 72 045 OUTDOOR phase DIM 2700K
REF N° 223 72 145 OUTDOOR phase DIM 3000K

3xXicato LED - 3x8,3 W - 3x720lm @ 70°C
- 230V/50Hz - inclusive LED driver
36° - - 0.5m - - CE - 850°C - 2 SDCM
Outdoor: Waterproof Calcyt+®
h=122 - 168x359 mm

INDOX 3X50 LED 500LM CRI 97 FIX IP54

REF N° 223 72 941 BATHROOM phase DIM 2700K
REF N° 223 72 841 BATHROOM phase DIM 3000K
REF N° 223 72 945 OUTDOOR phase DIM 2700K
REF N° 223 72 845 OUTDOOR phase DIM 3000K

3xXicato LED - 3x8,5 W - 3x500lm @ 70°C
- 230V/50Hz - inclusive LED driver
36° - - 0.5m - - CE - 850°C - 2 SDCM
Outdoor: Waterproof Calcyt+®
h=122 - 168x359 mm

OPTIONAL INSTALLATION KIT

REF N° 223 99 025 installation system for gypsum ceiling 25 mm
REF N° 223 99 030 installation system for gypsum ceiling 30 mm
REF N° 200 50 000 clip on lampholder ring, without diffusor
REF N° 200 50 001 clip on lampholder ring - with frosted diffusor
REF N° 844 00 000 Concrete box Indox 3x50 - Galvanized steel

INDOX 3X50 HAL

REF N° 223 10 050 Adj. IP20
REF N° 223 10 051 Fix. IP54 BATHROOM
REF N° 223 10 055 Fix. IP54 OUTDOOR

3x QR-CBC 51 - 50W - Gx5.3 - 12V -
CE excl lamp and transfo - - 0.5m - 850°C
Outdoor: Waterproof Calcyt+®
- h=98 - 168x359 mm

INDOX 3X50 ES

REF N° 223 11 050 Adj. IP20
REF N° 223 11 051 Fix. IP54 BATHROOM
REF N° 223 11 055 Fix. IP54 OUTDOOR

3x QPAR 16 - 50W - GZ10/GU10 -
CE 230V/50Hz - excl. lamp - - 0.5m - 850°C
Outdoor: Waterproof Calcyt+®
- h=100 - 168x359 mm

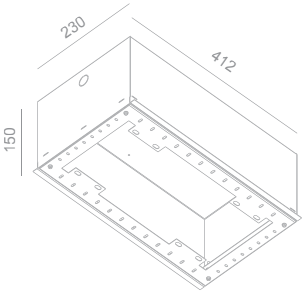

BRICK IN THE WALL®
invisible integration of light