TECHNICAL DATA SHEET

NORMALL LED 800LM 230VAC

REF N° 105 71 500 phase DIM CRI 80 2200°K
REF N° 105 71 000 phase DIM CRI 90 2700°K
REF N° 105 71 100 phase DIM CRI 90 3000°K
REF N° 105 61 500 DIM 1-10V CRI 80 2200°K
REF N° 105 61 000 DIM 1-10V CRI 90 2700°K
REF N° 105 61 100 DIM 1-10V CRI 90 3000°K
REF N° 105 31 500 DIM DALI CRI 80 2200°K
REF N° 105 31 000 DIM DALI CRI 90 2700°K
REF N° 105 31 100 DIM DALI CRI 90 3000°K

230V/50Hz - 9,3W - incl. line voltage driver
800lm@85°C - 950lm@25°C - - IP20
parallel wiring - 0.2m - CE - 850°C
2 SDCM - 2 Step MacAdam

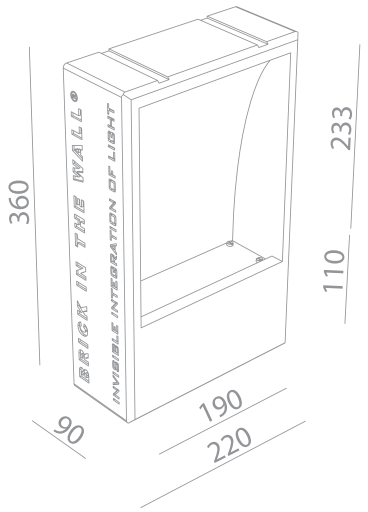

Ready for installation in solid walls
Optional plasterkit for installation into gypsum walls

PLASTERKIT NORMALL

REF N° 705 01 000 For mounting into gypsum walls
225x365 mm

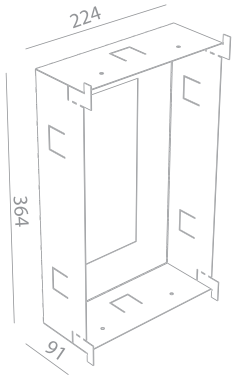

NORMALL LED 1000LM 230VAC

REF N° 105 72 000 phase DIM 2700°K
REF N° 105 72 100 phase DIM 3000°K
REF N° 105 62 000 DIM 1-10V 2700°K
REF N° 105 62 100 DIM 1-10V 3000°K
REF N° 105 32 000 DIM DALI 2700°K
REF N° 105 32 100 DIM DALI 3000°K

230V/50Hz - 11W - incl. line voltage driver
1000lm@85°C - 1150lm@25°C - IP20
parallel wiring - 0.2m - CE - 850°C
Colour Rendering Index CRI 90 - R9=75
2 SDCM - 2 Step MacAdam

NORMALL LED IP54

REF N° 105 21 001 on/off BATHROOM 2700°K
REF N° 105 21 101 on/off BATHROOM 3000°K
REF N° 105 21 201 on/off BATHROOM 4000°K
REF N° 105 21 005 on/off OUTDOOR 2700°K
REF N° 105 21 105 on/off OUTDOOR 3000°K
REF N° 105 21 205 on/off OUTDOOR 4000°K

230V/50Hz - 10,5W - incl. line voltage driver
720lm@75°C - 800lm@25°C - - IP54
parallel wiring - 0.2m - CE - 850°C
CRI 80 - 2 SDCM - 2 Step MacAdam
Outdoor: Waterproof Calcyt+®

NORMALL HAL

REF N° 105 01 060

QT-DE - max 60 W - R7s (74.5mm)
230V/50Hz - - 0.5m - - CE - IP20
850°C - dimmable -

NORMALL FLUO

REF N° 105 01 026

TC-DEL 26W - G24q-3 - 230V/50Hz
- incl. EVG - 0.5m - - CE - IP20
850°C - - eco

BRICK IN THE WALL®
invisible integration of light