TECHNICAL DATA SHEET

BEAMMEUP SQUARE 111 LED 1300LM CRI 80 REMOTE DRIVER

REF N° 282 29 040 Adj 2700K
REF N° 282 29 140 Adj 3000K
REF N° 282 29 142 Adj Vibrant V830

Xicato LED - 11,7W - 1300 lm @ 70°C
- - excl LED driver - 36° - IP20
Requires remote LED driver - 700 mA
-0.5m - - CE - 850°C - 2 SDCM
Surface mounted

BEAMMEUP SQUARE 111 LED 1300LM CRI 97 REMOTE DRIVER

REF N° 282 29 940 Adj 2700K
REF N° 282 29 840 Adj 3000K
REF N° 282 29 842 Adj Vibrant V930

Xicato LED - 17,6W - 1300 lm @ 70°C
- - excl LED driver - 36° - IP20
Requires remote LED driver - 700 mA
-0.5m - - CE - 850°C - 2 SDCM
Surface mounted

REMOTE LED DRIVER ON/OFF

REF N° 697 00 025 25W

230V/50Hz - - current controlled
- CE - IP20 - 700mA - not dimmable

REMOTE LED DRIVER DIM

REF N° 697 60 025 25W 1-10V DALI PUSH
REF N° 697 60 040 40W 1-10V DALI PUSH
REF N° 697 70 017 17W PHASE DIM

230V/50Hz - - current controlled
- CE - IP20 - 700mA - dimmable

BEAMMEUP SQUARE 111 AR

REF N° 282 13 100 Adj.

QR-LP 111 - 35-50-75-100W
G53 - 12V - - excl. transfo
- -1.0m - - CE - - IP20 - 850°C
Surface mounted

BEAMMEUP SQUARE 111 CDM

REF N° 282 19 070 Adj. CDM-TC - G8.5
REF N° 282 12 070 Adj. CDM-R - GX8.5

35W or 70W - 230V/50Hz - - excl. EVG
- -0.5m - - CE - - IP20 - 850°C
Surface mounted

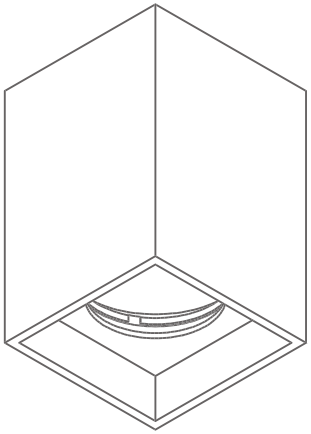

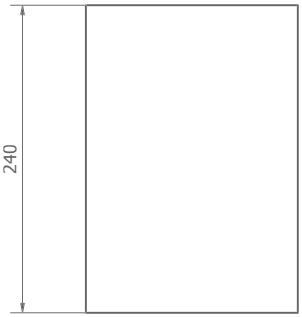

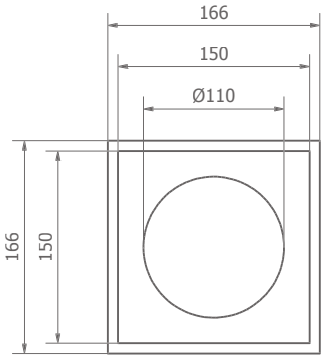

Surface Mounted

OPTIONAL INSTALLATION KIT

REF N° 201 00 060 Frosted diffusor for 111 LED series